## LOAD CENTER A1 SCHEDULE

| VOLTAGE: 208/120 | 1 Ph 3 Wire | MAIN: 125A | MLO | MOUNTING: FLUSH | REMARKS: Provide |
|---|---|---|---|---|---|
| BUS SIZE: 125 | AMP. | TOTAL LOAD: (2) | KVA | FAULT DUTY: See riser | copper ground bus |

| CKT NO. | DESCRIPTION | LOAD(kVA) | CKT BKR | PHASE A | PHASE B | CKT BKR | LOAD(kVA) | DESCRIPTION | CKT NO. |
|---|---|---|---|---|---|---|---|---|---|
| 1 | Refrigerator (7) | 1.2 | 20/1 | 3.5 | | 30/2 | 2.3 | WH-1 | 2 |
| 3 | Dishwasher (5) | 0.7 | 15/1 | | 3.0 | | 2.3 | "" (6) | 4 |
| 5 | Appliance (7) | 1.5 | 20/1 | 3.4 | | 30/2 | 1.9 | FCU-A | 6 |
| 7 | Appliance (7) | 1.5 | 20/1 | | 3.4 | | 1.9 | "" (1) | 8 |
| 9 | Clothes Washer (7) | 1.5 | 20/1 | 2.5 | | 20/2 | 1.0 | HP-A | 10 |
| 11 | Ltg/Rec (5) | 1.0 | 15/1 | | 2.0 | | 1.0 | "" (1) | 12 |
| 13 | Ltg/Rec (5) | 1.0 | 15/1 | 5.4 | | 50/2 | 4.4 | Range | 14 |
| 15 | Bathroom | 1.2 | 20/1 | | 5.6 | | 4.4 | "" | 16 |
| 17 | Spare | | 15/1 | 1.0 | | 20/1 | 1.0 | Microwave/Hood (5) | 18 |
| 19 | Spare | | 15/1 | | 2.5 | 30/2 | 2.5 | Dryer | 20 |
| 21 | Spare | | 20/1 | 2.5 | | | 2.5 | "" | 22 |
| 23 | Disposal (5) | 0.5 | 15/1 | | 0.5 | 20/1 | | Spare | 24 |

(1) Provide HACR type breaker for outdoor HVAC equipment.
(2) See Load Center calculations below
(3) Shunt Trip Breaker
(4) Provide GFI type circuit breaker
(5) Provide AFI circuit breaker per 2017 NEC 210.12(A) Loads to be distributed evenly per 2017 NEC 210.11(B).
(6) Provide lock-off breaker for water heater w/ pad lock per 2017 NEC 422.31
(7) Provide AFI/GFI circuit breaker. Label all receptacles AFI/GFI protected

### LOADCENTER "A1" CALCULATION

(PER 2017 NEC 220.82)

| | | | |
|---|---|---|---|
| LIGHTING AND RECEPTACLE LOAD | 561 SF x 3VA/SF | 1,683 | VA |
| TWO 20A APPLIANCE CIRCUITS | | 3,000 | VA |
| LAUNDRY CIRCUIT | | 1,500 | VA |
| RANGE | | 8,800 | VA |
| WATER HEATER | | 4,500 | VA |
| DISHWASHER | | 744 | VA |
| CLOTHES DRYER | | 5,000 | VA |
| REFRIGERATOR | | 1,200 | VA |
| DISPOSAL | | 480 | VA |
| MICROWAVE/HOOD | | 950 | VA |
| FURNACE FAN | | 395 | VA |
| SUBTOTAL | | 28,252 | VA |
| FIRST 10KVA @ 100% | | 10,000 | VA |
| 40% OF REMAINDER | 18,252 VA x 0.4 | 7,301 | VA |
| SUBTOTAL PER NEC 220.82(B): | | 17,301 | VA |
| HVAC | | | |
| COMPRESSOR | | 1,976 | VA |
| HEAT | | 5,800 | VA |
| TOTAL HVAC | | 5,776 | VA |
| HEAT@65% & COMP@100% PER NEC 220.82(C) | | 4,446 | VA |
| SUBTOTAL PER NEC 220.82(B): | | 17,301 | VA |
| HVAC PER NEC 220.82(C): | | 4,446 | VA |
| TOTAL DEMAND LOAD | | 21,747 | VA |
| 21,747 VA/208V= | 104.55 AMPS | 110 AMP SERVICE | |
| TOTAL CONNECTED LOAD: | 34,028 VA | | |
| NUMBER OF 15A LIGHTING/RECEPTACLE BRANCH CIRCUITS: | | 2 | |
| FEEDER SIZE: | 3#1/0(AL)&1#4(AL)G | FOR LOADCENTER WITHIN 120 FEET | |
| | 3#2/0(AL)&1#3(AL)G | FOR LOADCENTER OVER 120 FEET | |

## LOAD CENTER S1 SCHEDULE

| VOLTAGE: 208/120 | 1 Ph 3 Wire | MAIN: 125A | MLO | MOUNTING: FLUSH | REMARKS: Provide |
|---|---|---|---|---|---|
| BUS SIZE: 125 | AMP. | TOTAL LOAD: (2) | KVA | FAULT DUTY: See riser | copper ground bus |

| CKT NO. | DESCRIPTION | LOAD(kVA) | CKT BKR | PHASE A | PHASE B | CKT BKR | LOAD(kVA) | DESCRIPTION | CKT NO. |
|---|---|---|---|---|---|---|---|---|---|
| 1 | Refrigerator (7) | 1.2 | 20/1 | 3.5 | | 30/2 | 2.3 | WH-1 | 2 |
| 3 | Dishwasher (5) | 0.7 | 15/1 | | 3.0 | | 2.3 | "" (6) | 4 |
| 5 | Appliance (7) | 1.5 | 20/1 | 3.4 | | 30/2 | 1.9 | FCU-A | 6 |
| 7 | Appliance (7) | 1.5 | 20/1 | | 3.4 | | 1.9 | "" (1) | 8 |
| 9 | Clothes Washer (7) | 1.5 | 20/1 | 2.5 | | 20/2 | 1.0 | HP-A | 10 |
| 11 | Ltg/Rec (5) | 1.0 | 15/1 | | 2.0 | | 1.0 | "" (1) | 12 |
| 13 | Ltg/Rec (5) | 1.0 | 15/1 | 5.4 | | 50/2 | 4.4 | Range | 14 |
| 15 | Bathroom | 1.2 | 20/1 | | 5.6 | | 4.4 | "" | 16 |
| 17 | Spare | | 15/1 | 1.0 | | 20/1 | 1.0 | Microwave/Hood (5) | 18 |
| 19 | Spare | | 15/1 | | 2.5 | 30/2 | 2.5 | Dryer | 20 |
| 21 | Spare | | 20/1 | 2.5 | | | 2.5 | "" | 22 |
| 23 | Disposal (5) | 0.5 | 15/1 | | 0.5 | 20/1 | | Spare | 24 |

(1) Provide HACR type breaker for outdoor HVAC equipment.
(2) See Load Center calculations below
(3) Shunt Trip Breaker
(4) Provide GFI type circuit breaker.
(5) Provide AFI circuit breaker per 2017 NEC 210.12(A) Loads to be distributed evenly per 2017 NEC 210.11(B).
(6) Provide lock-off breaker for water heater w/ pad lock per 2017 NEC 422.31
(7) Provide AFI/GFI circuit breaker. Label all receptacles AFI/GFI protected

### LOADCENTER "S1" CALCULATION

(PER 2017 NEC 220.82)

| | | | |
|---|---|---|---|
| LIGHTING AND RECEPTACLE LOAD | 473 SF x 3VA/SF | 1,419 | VA |
| TWO 20A APPLIANCE CIRCUITS | | 3,000 | VA |
| LAUNDRY CIRCUIT | | 1,500 | VA |
| RANGE | | 8,800 | VA |
| WATER HEATER | | 4,500 | VA |
| DISHWASHER | | 744 | VA |
| CLOTHES DRYER | | 5,000 | VA |
| REFRIGERATOR | | 744 | VA |
| DISPOSAL | | 480 | VA |
| MICROWAVE/HOOD | | 950 | VA |
| FURNACE FAN | | 395 | VA |
| SUBTOTAL: | | 27,532 | VA |
| FIRST 10KVA @ 100% | | 10,000 | VA |
| 40% OF REMAINDER | 17,532 VA x 0.4 | 7,013 | VA |
| SUBTOTAL PER NEC 220.82(B): | | 17,013 | VA |
| HVAC | | | |
| COMPRESSOR | | 1,976 | VA |
| HEAT | | 3,800 | VA |
| TOTAL HVAC | | 5,776 | VA |
| HEAT@65% & COMP@100% PER NEC 220.82(C) | | 4,446 | VA |
| SUBTOTAL PER NEC 220.82(B): | | 17,013 | VA |
| HVAC PER NEC 220.82(C): | | 4,446 | VA |
| TOTAL DEMAND LOAD | | 21,459 | VA |
| 21,459 VA/208V= | 103.17 AMPS | 110 AMP SERVICE | |
| TOTAL CONNECTED LOAD: | 33,308 VA | | |
| NUMBER OF 15A LIGHTING/RECEPTACLE BRANCH CIRCUITS: | | | |
| FEEDER SIZE: | 3#1/0(AL)&1#4(AL)G | FOR LOADCENTER WITHIN 120 FEET | |
| | 3#2/0(AL)&1#3(AL)G | FOR LOADCENTER OVER 120 FEET | |

## FAIR HOUSING NOTES

ALL WORK SHALL BE INSTALLED IN STRICT ACCORDANCE WITH THE HUD FAIR HOUSING ACCESSIBILITY GUIDELINES (FHAG), AND AMERICANS WITH DISABILITIES ACT ACCESSIBILITY GUIDELINES (ADAAG) TITLE III.

1.1.1. LIGHT SWITCHES (WITH THE TOGGLE SWITCH IN THE "ON" POSITION) MUST NOT EXCEED A MAXIMUM OF 48" A.F.F.

1.1.2. ALL OUTLETS (POWER OR DATA) AND SWITCHES OVER THE KITCHEN AND BATHROOM COUNTERTOPS MUST NOT EXCEED A MAXIMUM OF 44" A.F.F. TO THE CENTERLINE OF THE OUTLET.

1.1.3. IN L OR U SHAPED KITCHENS, AT LEAST ONE (1) OUTLET MUST BE CENTERED A MINIMUM OF 36" FROM EACH INSIDE CORNER.

1.1.4. IN L OR U SHAPED KITCHENS, IF OTHER DEVICES ARE PLACED ON AN INSIDE CORNER, THEN THEY SHALL BE MOUNTED A MINIMUM OF 36" FROM AN INSIDE CORNER.

1.1.5. SIDEWALL OUTLETS AT THE VANITY COUNTERTOPS SHALL BE CENTERED A MINIMUM OF 18" FROM INSIDE WALL CORNER. IF THE OUTLETS ARE MOUNTED ON THE MIRROR WALL, THAN THE WALL OUTLET SHALL BE A MINIMUM OF 24" FROM THE INSIDE WALL CORNER TO PROVIDE A PARALLEL APPROACH.

1.1.6. WALL OUTLETS MUST BE INSTALLED A MINIMUM OF 15" A.F.F. TO THE CENTER LINE OF THE BOTTOM OUTLET.

1.1.7. TOP OF THE THERMOSTATS SHALL BE MOUNTED NO HIGHER THAN 46" A.F.F. IN ALL UNITS AND COMMON AREAS.

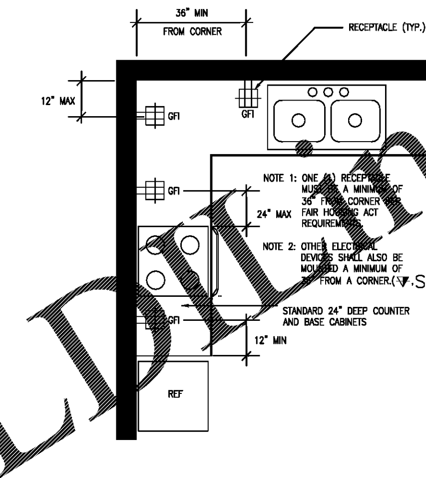


5 ELECTRICAL DEVICES - DWELLING UNIT KITCHEN
Scale: NOT TO SCALE Plan

## GENERAL NOTES

1. TYPE N.M. WIRING FOR BRANCH CIRCUIT WIRING FOR TYPES III, IV, AND V CONSTRUCTION IF ACCEPTABLE TO LOCAL JURISDICTION HAVING AUTHORITY. PROVIDE M.C. CABLE OR WIRE/CONDUIT FOR ALL OTHER CONSTRUCTION TYPES.
2. SEAL ALL OUTLET BOXES PER LOCAL ENERGY CODE.
3. INTERCONNECT SMOKE DETECTORS IN INDIVIDUAL UNITS SO THAT INITIATION OF ONE WILL CAUSE INITIATION OF ALL.
4. Ⓘ INDICATED MECHANICAL EQUIPMENT. SEE EX.XX FOR MECHANICAL CONNECTION SCHEDULE.
5. OUTLET BOXES SHALL NOT BE INSTALLED WITHIN ANY WALL BACK TO BACK.
6. ELECTRICAL OUTLET BOXES IN THE PARTY WALL(S), AS WELL AS INTERIOR WALLS, SHALL BE STAGGERED SO THAT THEY ARE NOT BACK-TO-BACK. PUTTY PACKS SHALL BE INSTALLED AROUND ALL BOXES. IF A SITUATION ARISES WHERE THE OUTLET BOXES MUST BE INSTALLED BACK-TO-BACK, USE A SOLID PANEL TO BLOCK NOISE TRANSMISSION BETWEEN THE BACK OF THE BOXES. IN ADDITION, USE ACOUSTICAL INSULATION BETWEEN THE SOLID BLOCKING PANEL AND THE WALL SURFACES, COMPLETELY SURROUNDING THE OUTLET BOXES.
7. GFCI OUTLETS SHALL NOT BE INSTALLED IN MIRRORS. COORDINATE EXACT LOCATION WITH ARCHITECT PRIOR TO ROUGH-IN.
8. SINGLE STATION SMOKE/CO DETECTORS SHALL BE PHOTOELECTRIC TYPE; PROVIDE GENTEX TYPE 503F OR EQUAL. SMOKE ALARMS SHALL BE POWERED FROM 120V A/C POWER SOURCE AND HAVE A BACKUP BATTERY SOURCE. SMOKE ALARMS A/C POWER SHALL BE SUPPLIED BY UNSWITCHED PORTION OF THE BEDROOM CIRCUIT. SMOKE ALARMS SHALL BE INTERCONNECTED IN INDIVIDUAL UNITS SO THAT INITIATION OF ONE WILL CAUSE INITIATION OF ALL. REFER TO NFPA 72 FOR SMOKE DETECTOR INFORMATION.
   A. INSTALLATION – REGARDLESS OF LOCATIONS SHOWN ON DRAWINGS, INSTALL BASED ON I–IV BELOW:
      I. INSTALLED INSIDE AND OUTSIDE OF EVERY SLEEPING AREA AND ON ALL LEVELS OF DWELLING UNITS. DETECTOR SHALL BE INSTALLED WITHIN 21 FEET OF ANY DOOR TO A SLEEPING ROOM.
      II. SMOKE ALARMS SHALL NOT BE LOCATED WITHIN 36" HORIZONTAL PATH FROM A DOOR TO A BATHROOM CONTAINING A SHOWER OR TUB.
      III. SMOKE ALARMS SHALL NOT BE LOCATED WITHIN 36" HORIZONTAL PATH FROM SUPPLY REGISTERS OF A FORCED AIR HEATING OR COOLING SYSTEM AND SHALL BE INSTALLED OUTSIDE OF THE DIRECT AIRFLOW FROM THOSE REGISTERS. COORDINATE EXACT LOCATION OF SMOKE ALARMS WITH MECHANICAL CONTRACTOR PRIOR TO ROUGH-IN.
      IV. SMOKE ALARMS SHALL NOT BE LOCATED WITHIN 36" HORIZONTAL PATH FROM THE TIP OF THE BLADE OF A CEILING-SUSPENDED PADDLE FAN.
9. SEE ARCHITECTURAL REFLECTED CEILING PLAN FOR EXACT LOCATIONS OF LIGHTING FIXTURES.
10. FINAL SELECTION, QUANTITY, AND LOCATION OF LIGHTS IN APARTMENTS TO BE COORDINATED WITH ARCHITECT AND INTERIOR PRIOR TO BID.
11. TYPE NM CABLE IS NOT ALLOWED EXPOSED IN HVAC CLOSETS. PROVIDE TYPE MC CABLE OR ROUTE TYPE NM CABLE IN FLEXIBLE METALLIC CONDUIT SO THAT NM CABLE IS NOT EXPOSED IN CLOSET.
12. PROVIDE TAMPER RESISTANT RECEPTACLES IN ALL ROOMS REQUIRED BY NEC 406.12.
13. ALL 15 AND 20 AMP SINGLE PHASE BRANCH CIRCUITS SUPPLYING LIGHTS, RECEPTACLES, AND SMOKE DETECTORS WITHIN LIVING UNITS SHALL BE PROTECTED BY A LISTED "ARC FAULT CIRCUIT INTERRUPTER" BREAKER, EXEMPT CIRCUITS INCLUDE BATHROOMS, GARAGES, AND OUTDOOR RECEPTACLES.
14. RECEPTACLES INSTALLED IN WET LOCATIONS SHALL BE WEATHER RESISTANT, WEATHERPROOF, AND GFCI.
15. PROVIDE CONDUIT SLEEVE EXTENDING 18" ON EITHER SIDE OF FIRE WALLS FOR WIRING THAT PASSES THRU FIRE WALLS.
16. VERIFY MOUNTING AND OPERATION HEIGHTS OF ALL ELECTRICAL DEVICES FOR ACCESSIBILITY WITH ARCHITECT PRIOR TO BID/ROUGH-IN.
17. ANY CEILING MOUNTED DEVICE WITHIN 4' OF ANOTHER CEILING MOUNTED DEVICE, PROVIDE A METAL BOX.

## UNIT PLAN KEY NOTES (THIS SHEET ONLY)

1 – PROVIDE (NEMA 14-50R) RECEPTACLE W/3#6, #10G CIRCUIT FOR RANGE. PROVIDE RANGE CORD.
2 – PROVIDE (NEMA 5-20R) RECEPTACLE W/2#12, #12G CIRCUIT FOR RANGE HOOD/MICROWAVE.
3 – MOUNT INSIDE SINK BASE CABINET ADJACENT TO DISHWASHER AND BREAK TABS ON RECEPTACLE, TOP RECEPTACLE SHALL BE CONTROLLED BY WALL SWITCH (MOUNT IN SAME BOX AS ABOVE COUNTER TOP RECEPTACLE) FOR DISPOSAL, BOTTOM RECEPTACLE SHALL BE UNSWITCHED FOR DISHWASHER. PROVIDE 3 PRONG, 4' SO CORD WITH PLUG FOR DISHWASHER AND 3 PRONG, 3' SO CORD WITH PLUG FOR GARBAGE DISPOSAL. PROVIDE 2 CIRCUITS AS INDICATED ON THE LOAD CENTER SCHEDULE.
4 – PROVIDE A (NEMA 5-20R) RECEPTACLE MTD 48" AFF WITH 2#12, #12G. FOR WASHER.
5 – PROVIDE A (NEMA 14-30R) RECEPTACLE MTD 48" AFF WITH 3#10, #10G CIRCUIT FOR CLOTHES DRYER. PROVIDE DRYER CORD.
6 – FLUSH MOUNTED LOAD CENTER (W/FLUSH MOUNT COVER, 1/2" OVERLAP); CONTRACTOR SHALL VERIFY THAT THERE IS NO PIPING AND/OR DUCTWORK INSTALLED ABOVE LOADCENTER. MOUNT TOP CIRCUIT BREAKER HANDLE AT 48" AFF. COORDINATE EXACT LOCATION AND REQUIREMENTS WITH ARCHITECT/INTERIOR DESIGNER/OWNER PRIOR TO BID/ROUGH-IN.
7 – PROVIDE MINIMUM 14" X 28" FLUSH MOUNTED STRUCTURED MEDIA ENCLOSURE WITH LOCKING DOOR, 1x6 BRIDGED TELEPHONE BOARD AND 6 WAY 1GHZ PASSIVE VIDEO SPLITTER. PROVIDE (1) CAT 6 CABLE FROM PUNCH DOWN BLOCK TO EACH DATA/TELEPHONE OUTLET (NO DAISY CHAINING) AND (1) CAT 6 CABLE FROM PUNCH DOWN BLOCK TO TELEPHONE SERVICE DEMARCATION LOCATION. PROVIDE (1) RG11 COAXIAL CABLE FROM SPLITTER TO EACH TELEVISION OUTLET (NO DAISY CHAINING) AND PROVIDE (1) RG11 COAXIAL CABLE FROM SPLITTER TO CABLE SERVICE DEMARCATION LOCATION. TERMINATE ALL CABLES ON APPROPRIATE TERMINATION POINTS. CLEARLY LABEL EACH PORT IDENTIFYING THE DESTINATION ADDRESS OF EACH CABLE. PROVIDE A MINIMUM OF 12" SLACK CABLE AT EACH OUTLET. PROVIDE (1) 20A DUPLEX RECEPTACLE MOUNTED WITHIN ENCLOSURE. MOUNT ENCLOSURE AT 36" AFF. FIELD VERIFY. SEE TELE/CATV RISER DIAGRAM.
8 – PROVIDE A FAN-RATED JUNCTION BOX RECESSED FLUSH WITHIN CEILING.
9 – 1 SWITCH SHALL CONTROL FAN. 1 SPST OR 3 WAY SWITCH SHALL CONTROL LIGHT.
10 – MOUNT RECEPTACLE HORIZONTALLY WITHIN 12" OF FRONT EDGE OF COUNTER. COORDINATE WITH THE MILL WORK CONTRACTOR FOR OUTLET LOCATION WHEN NO SIDE WALL IS AVAILABLE.
11 – MOUNT HORIZONTALLY 4" BELOW COUNTERTOP WHERE COUNTER OVERHANG DOES NOT EXTEND MORE THAN 6". COORDINATE WITH ARCHITECT.
12 – CONNECT TO GFCI BRANCH CIRCUIT
13 – PROVIDE HUBBLE USB15A5** SERIES TYPE COMBO RECEPTACLE, CIRCUIT DOWNSTREAM OF GFI-PROTECTED OUTLET IF LOCATED IN KITCHEN, WITHIN 6'-0" OF A SINK, OR NOTED AS "GFI".
14 – SEE 5/E1.1 FOR FAIR HOUSING OUTLET SPACING IN KITCHEN
15 – CONNECT TO UNIT LIGHTING BRANCH CIRCUITRY
16 – PROVIDE JUNCTION BOX FOR WATER HEATER.
17 – PROVIDE JUNCTION BOX FOR INDOOR UNIT.
18 – MOUNT UNDER CABINET, BREAK TABS, TOP RECEPTACLE SHALL BE CONTROLLED BY SWITCH FOR DISPOSAL, BOTTOM RECEPTACLE SHALL BE UNSWITCHED FOR DISHWASHER. PROVIDE 4' SO CORD WITH 3 PRONG PLUG FOR DISHWASHER AND 3' SO CORD WITH 3 PRONG PLUG FOR GARBAGE DISPOSAL. MOUNT SWITCH INSIDE BASE CABINET. PROVIDE 2 CIRCUITS AS INDICATED ON THE LOAD CENTER SCHEDULE.

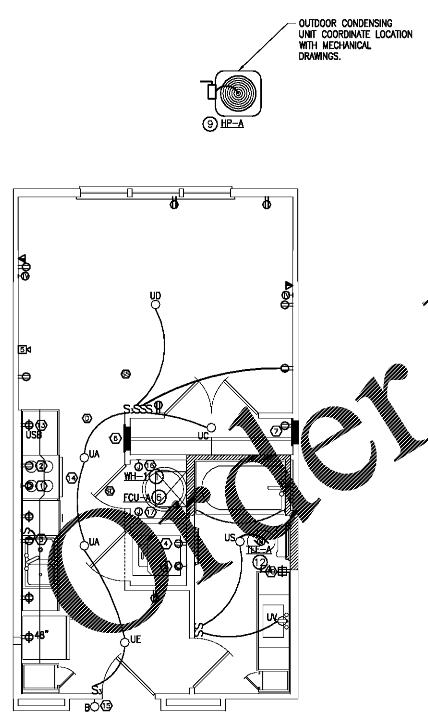


1 Unit S1 - Electrical
Scale: 1/4" = 1'-0" Plan

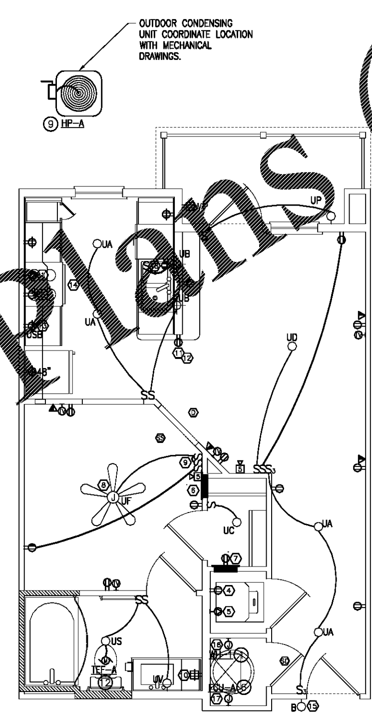


2 Unit A1 - Electrical
Scale: 1/4" = 1'-0" Plan

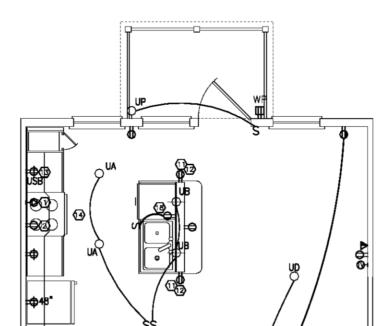

3 Unit A1-ALT 1 - Electrical
Scale: 1/4" = 1'-0" Plan

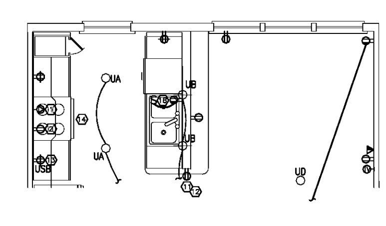

4 Unit A1-ALT 2 - Electrical
Scale: 1/4" = 1'-0" Plan

Seal
03-19-2021

2PA
POOLE & POOLE ARCHITECTURE
3736 Winterfield Road, Suite 102
Midlothian, Virginia 23113
Telephone 804.225.0215
www.2pa.net

Project: 1928
CADD File:
Drawn By: SW
Checked By: WM

Permit Release:
May 19, 2020
Construction Release Set:
May 19, 2020

| Revisions | | |
|---|---|---|
| No. | Date | Description |
| 1 | 03/19/21 | Owner Comments |

| ASI / RFI Revisions | | |
|---|---|---|
| No. | Date | Description |

© 2019 Poole & Poole Architecture, LLC
Drawings and specifications are and shall remain the property of Poole & Poole Architecture, LLC and shall not be used or reproduced in whole or part in any form without prior written consent of Poole & Poole Architecture, LLC.

PHILLIPS GRADICK ENGINEERING, P.C. PGE # NC219019
2320 W. Morehead Street
Suite 200
Charlotte, NC 28208
(704) 900-5838 (T)
(704) 842-3807 (F)

This drawing, as an instrument of service is and shall remain the property of the Phillips Gradick Engineering, P.C. and shall not be reproduced, published or used in any way without the permission of Phillips Gradick Engineering, P.C. This Drawing is copyrighted and protected under section 120 of the U.S. Copyright Act USC. The protection includes but is not limited to design and construction techniques. Unauthorized use of these plans without the express written permission of Phillips Gradick Engineering, P.C. is prohibited.

**Borough 33**
an Apartment Community by
33 Broad MF, LLC
in Chattanooga, Tennessee

Drawing Title:
Unit Plan

**E1.1**

ISSUED FOR CONSTRUCTION

Order Plans @ WWW.LDPline.com