System No. C-AJ-1226

CAJ 1226

Classified by Underwriters Laboratories, Inc. to UL 1479 and CAN/ULC-S115

ANSI/UL1479 (ASTM E814)	CAN/ULC S115
F Rating — 3 Hr	F Rating — 3 Hr
T Rating — 0 Hr	FT Rating — 0 Hr
L Rating At Ambient — Less Than 1 CFM/sq ft	FH Rating — 3 Hr
L Rating At 400 F — 4 CFM/sq ft	FTH Rating — 0 Hr
	L Rating At Ambient — Less Than 1 CFM/sq ft
	L Rating At 400 F — 4 CFM/sq ft

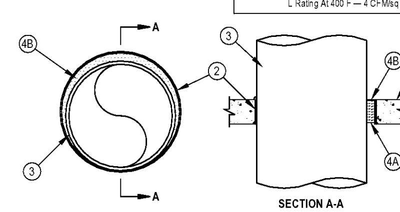

1. Floor or Wall Assembly — Min 4-1/2 in. (114 mm) thick reinforced lightweight or normal weight (100-150 pcf or 1600-2400 kg/m³) concrete. Wall may also be constructed of any UL Classified Concrete Blocks*. Max diam of opening is 32 in. (813 mm).
2. Metallic Sleeve — (Optional) Nom 32 in. (813 mm) diam (or smaller) Schedule 40 (or heavier) steel sleeve cast or grouted into floor or wall assembly, flush with floor or wall surfaces or extending a max of 3 in. (76 mm) above floor or beyond both surfaces of wall.
2A. Sheet Metal Sleeve — (Optional) Max 6 in. (152 mm) diam, min 26 ga. galv steel provided with a 26 ga galv steel square flange spot welded to the sleeve at approx mid-height, or flush with bottom of sleeve in floors, and sized to be a min of 2 in. (51 mm) larger than the sleeve diam. The sleeve is to be cast in place and may extend a max of 4 in. (102 mm) below the bottom of the deck and a max of 1 in. (25 mm) above the top surface of the concrete floor.
2B. Sheet Metal Sleeve — (Optional) - Max 12 in. (305 mm) diam, min 24 ga galv steel provided with a 24 ga galv steel square flange spot welded to the sleeve at approx mid-height, or flush with bottom of sleeve in floors, and sized to be a min of 2 in. (51 mm) larger than the sleeve diam. The sleeve is to be cast in place and may extend a max of 4 in. (102 mm) below the bottom of the deck and a max of 1 in. (25 mm) above the top surface of the concrete floor.
3. Through-Penetrant — One metallic pipe, tube or conduit to be installed either concentrically or eccentrically within the firestop system. The annular space between penetrant and periphery of opening shall be min 0 in. (point contact) to max 1-7/8 in. (48 mm). Penetrant may be installed with continuous point contact. Penetrant to be rigidly supported on both sides of floor or wall assembly. The following types and sizes of metallic penetrants may be used:
   A. Steel Pipe — Nom 30 in. (762 mm) diam (or smaller) Schedule 10 (or heavier) steel pipe.
   B. Iron Pipe — Nom 30 in. (762 mm) diam (or smaller) cast or ductile iron pipe.
   C. Copper Pipe — Nom 6 in. (152 mm) diam (or smaller) Regular (or heavier) copper pipe.
   D. Copper Tubing — Nom 6 in. (152 mm) diam (or smaller) Type L (or heavier) copper tubing.
   E. Conduit — Nom 6 in. (152 mm) diam (or smaller) steel conduit.
   F. Conduit — Nom 4 in. (102 mm) diam (or smaller) steel electrical metallic tubing (EMT).

Hilti Firestop Systems

Reproduced by HILTI, Inc. Courtesy of Underwriters Laboratories, Inc. January 07, 2015

Page: 1 of 2

System No. C-AJ-1226

CAJ 1226

4. Firestop System — The firestop system shall consist of the following:
   A. Packing Material — Min 4 in. (102 mm) thickness of min 4 pcf (64 kg/m³) mineral wool batt insulation firmly packed into opening as a permanent form. Packing material to be recessed from top surface of floor or sleeve or from both surfaces of wall or sleeve as required to accommodate the required thickness of fill material.
   B. Fill, Void or Cavity Material* — Sealant — Min 1/4 in. (6 mm) thickness of fill material applied within the annulus, flush with top surface of floor or sleeve or with both surfaces of wall or sleeve. At the point or continuous contact locations between penetrant and concrete or sleeve, a min 1/4 in. (6 mm) diam bead of fill material shall be applied at the concrete or sleeve/ pipe penetrant interface on the top surface of floor and on both surfaces of wall.
   HILTI CONSTRUCTION CHEMICALS, DIV OF HILTI INC — FS-One Sealant or FS-ONE MAX Intumescent Sealant

* Indicates such products shall bear the UL or cUL Certification Mark for jurisdictions employing the UL or cUL Certification (such as Canada), respectively.

Hilti Firestop Systems

Reproduced by HILTI, Inc. Courtesy of Underwriters Laboratories, Inc. January 07, 2015

Page: 2 of 2

(1) Metal Conduit Thru Rated Concrete Floor/Wall Assembly
Scale: Not to Scale

System No. C-AJ-3095

CAJ 3095

Classified by Underwriters Laboratories, Inc. to UL 1479 and CAN/ULC-S115

ANSI/UL1479 (ASTM E814)	CAN/ULC S115
F Rating — 3 Hr	F Rating — 3 Hr
T Ratings — 0, 1/2 and 3/4 Hr (See Item 3)	FT Ratings — 0, 1/2 and 3/4 Hr (See Item 3)
	FH Rating — 3 Hr
	FTH Ratings — 0, 1/2 and 3/4 Hr (See Item 3)

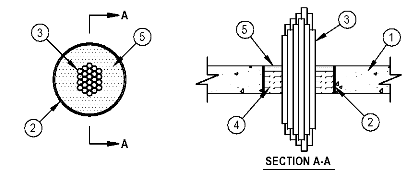

1. Floor or Wall Assembly — Min 2-1/2 in. (64 mm) thick reinforced lightweight or normal weight (100-150 pcf or 1600 2400 kg/m3) concrete floor or min 3 in. (76 mm) thick reinforced lightweight or normal weight concrete wall. Wall may also be constructed of any UL Classified Concrete Blocks*. Max diam of opening is 6 in. (152 mm).
See Concrete Blocks (CAZT) category in the Fire Resistance Directory for names of manufacturers.
2. Sleeve — (Optional) — Nom 6 in. (152 mm) diam (or smaller) Schedule 10 (or heavier) steel pipe cast or grouted into floor or wall assembly, flush with floor or wall surfaces or extending a max 3 in. (76 mm) above the floor or both surfaces of the wall. If the steel sleeve extends above the floor or both surfaces of the wall, the T Rating of the firestop system is 0 Hr.
3. Cables — Aggregate cross-sectional area of cables in opening to be min 25 percent to max 45 percent of the aggregate cross-sectional area of the opening. Cables to be rigidly supported on both sides of floor or wall assembly. Any combination of the following types and sizes of metallic conductor or fiber optic cable may be used:
   A. Max 500 kcmil single copper connector power cable with thermoplastic insulation and polyvinyl chloride (PVC) jacket. When single copper conductor power cable is used, T, FT and FTH Rating is 0 hr.
   B. Max 350 kcmil single conductor power cables with either aluminum or copper conductors and cross-linked polyethylene (XPLE) insulation. When single aluminum conductor power cable is used, T Rating is 0 hr. When single copper conductor power cable is used, T, FT and FTH Rating is 1/2 hr.
   C. Max 300 pair No. 24 AWG copper conductor telecommunication cables with polyvinyl chloride (PVC) insulation and jacket material. When telecommunication cable is used, T, FT and FTH Rating is 0 hr.
   D. Max three copper connector No. 6 AWG cable with polyvinyl chloride (PVC) insulation and jacket material. When multi-connector power cable is used, T Rating is 0 hr.
   E. Max 7/C copper conductor No. 12 AWG multiconductor power and control cables with PVC or cross-linked polyethylene (XLPE) insulation and PVC jacket. When multiconductor power and control cable is used, T, FT and FTH Rating is 3/4 hr.
   F. Multiple fiber optical communication cables jacketed with PVC and having a max outside diam of 1/2 in. When fiber optic cable is used, T, FT and FTH Rating is 3/4 hr.
   G. Max 3/C copper conductor No. 12 AWG with Bare aluminum ground, polyvinyl chloride (PVC) insulated steel, Metal-clad cable+. When MC cable is used, T, FT and FTH Rating is 0 hr.
   AFC CABLE SYSTEMS INC

Hilti Firestop Systems

Reproduced by HILTI, Inc. Courtesy of Underwriters Laboratories, Inc. January 14, 2015

Page: 1 of 2

System No. C-AJ-3095

CAJ 3095

   H. Max 3/C with ground 2/0 AWG copper conductor SER cable with cross-linked polyethylene (XLPE) insulation and polyvinyl chloride (PVC) jacket. When SER cable is used, T, FT and FTH Rating is 0 hr.
   I. Max RG/U coaxial cable with polyethylene (PE) insulation and polyvinyl chloride (PVC) jacket having a max outside diameter of ½ in. When coaxial cable is used, T Rating is 0 hr.
   J. Fire Resistive Cables* - Max 1-1/4 in. (32 mm) diam single conductor or multi conductor Type MI cable. A min 1/8 in. (3 mm) separation shall be maintained between MI cables and any other type of cable. When Fire Resistive Cables *are used, T, FT and FTH Rating is 0 hr.
   K. Through Penetrating Product* — Any Cables, Metal-Clad Cable+ or Armored Cable+ currently Classified under the Through Penetrating Products category.
   See Through Penetrating Product (XHLY) category in the Fire Resistance Directory for names of manufacturers.
4. Packing Material — Min 2 in. (51 mm) thickness of min 4 pcf (64 kg/m3) mineral wool batt insulation firmly packed into opening as a permanent form. Packing material to be recessed 1/2 in. (13 mm) from top surface of floor or from both surfaces of wall to accommodate the fill material. If the steel sleeve (Item 2) extends above the top of the floor, the packing material shall be flush with the bottom surface of the floor.
5. Fill, Void or Cavity Material* — Sealant — Min 1/2 in. (13 mm) thickness of fill material applied within the annulus, flush with top surface of floor or with both surfaces of wall.
HILTI CONSTRUCTION CHEMICALS, DIV OF HILTI INC — FS-One Sealant or FS-ONE MAX Intumescent Sealant

* Indicates such products shall bear the UL or cUL Certification Mark for jurisdictions employing the UL or cUL Certification (such as Canada), respectively.

Hilti Firestop Systems

Reproduced by HILTI, Inc. Courtesy of Underwriters Laboratories, Inc. January 14, 2015

Page: 2 of 2

(2) Metallic Conductor cable Thru Rated Concrete Floor/Wall Assembly
Scale: Not to Scale

System No. F-A-3007

FA 3007

Classified by Underwriters Laboratories, Inc. to UL 1479 and CAN/ULC-S115

ANSI/UL1479 (ASTM E814)	CAN/ULC S115
F Rating — 3 Hr	F Rating — 3 Hr
T Rating — 0, 1/4, 1/2 Hr (See Items 3 and 4)	FT Rating — 0, 1/4, 1/2 Hr (See Items 3 and 4)
	FH Rating — 3 Hr
	FTH Rating — 0, 1/4, 1/2 Hr (See Items 3 and 4)

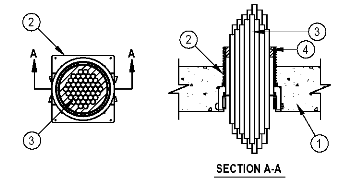

1. Floor Assembly — Min 4-1/2 in. (114 mm) thick reinforced lightweight or normal weight (100-150 pcf or 1600-2400 kg/m3) concrete.
1A. Floor Assembly - (Optional - Not Shown) — The fire rated unprotected concrete and steel floor assembly shall be constructed of the materials and in the manner specified in the individual D900 Series designs in the UL Fire Resistance Directory and as summarized below:
   A. Concrete — Min 4-1/2 in. (114 mm) thick reinforced lightweight or normal weight (100-150 pcf or 1600-2400 kg/m3) concrete.
   B. Steel Floor and Form Units* — Composite or non-composite max 3 in. (76 mm) deep galv steel fluted units as specified in the individual Floor-Ceiling Design.
2. Firestop Device* — Cast in place firestop device permanently embedded during concrete placement in accordance with accompanying installation instructions.
   HILTI CONSTRUCTION CHEMICALS, DIV OF HILTI INC — CP 680-75/2.5"N, CP 680-110/4"N, CP 680-160/6"N, CP682-72/2.5", CP682-110/4", CP 680-M 2", CP 680-M 3", CP 680-M 4", CP 680-P 2", CP 680-P 3", CP 680-P 4", CP 680-P 6", CP 680-PX 2", CP 680-PX 3"
3. Cables — Cables to be rigidly supported on both sides of the assembly. Any combination of the following types and sizes of copper conductor cables may be used:
   A. Max 1/C 750 kcmil (or smaller) copper conductor cable with polyvinyl chloride (PVC) insulation and jacket.
   B. Max 7/C No. 12 AWG with polyvinyl chloride (PVC) insulation and jacket.
   C. Max 300 pair No. 24 AWG telephone cable with PVC insulation and jacket.
   D. Multiple fiber optical communication cable jacketed with PVC and having a max OD of 1/2 in. (13 mm).
   E. Max 3/C No. 12 AWG with ground with polyvinyl chloride jacketed steel clad Type MC cable.

Hilti Firestop Systems

Reproduced by HILTI, Inc. Courtesy of Underwriters Laboratories, Inc. June 29, 2015

Page: 1 of 2

System No. F-A-3007

FA 3007

The firestop device and max cable bundle diameter shall be sized as follows:

Max Bundle Diameter	Firestop Device	T Rating-Hr
2 in. (51 mm)	CP 680-75/2.5"N, CP 682-75/2.5" CP 680-M 2", CP 680-P 2", CP 680-PX 2"	1/4
3 in. (76 mm)	CP 680-75/2.5"N, CP 682-75/2.5" CP 680-M 3", CP 680-P 3", CP 680-PX 3"	1/2
4-1/2 in. (114 mm)	CP 680-110/4"N, CP 682-110/4" CP 680-M 4", CP 680-P 4"	1/2
6-1/2 in. ([illegible])	CP 680-160/6"N CP 680-P 6"	0

4. Fill, Void or Cavity Material* - Putty — Min 1 in. (25 mm) thickness of fill material applied within annulus flush with top surface of device. Fill material is optional for 2-1/2 (64 mm) diam (or smaller) cable bundle installed in 3 in. device and 3 in. (76 mm) diam (or larger) cable bundle installed in 4 in. device and 2 in. (51 mm) diam (or smaller) cable bundle installed in 2 in. or 2.5 in. device. The T Rating for the firestop system is 1/4 hr when fill material or packing material (Item 4 or 4A) is not used.
   HILTI CONSTRUCTION CHEMICALS, DIV OF HILTI INC — CP 618 Firestop Putty Stick
4A. Packing Material (Not Shown) — As an alternate to Item 4, min 2 in. thickness of min 4 pcf (64 kg/m3) mineral wool insulation firmly packed to the fullest extent possible within annulus flush with top surface of device.
* Indicates such products shall bear the UL or cUL Certification Mark for jurisdictions employing the UL or cUL Certification (such as Canada), respectively.

Hilti Firestop Systems

Reproduced by HILTI, Inc. Courtesy of Underwriters Laboratories, Inc. June 29, 2015

Page: 2 of 2

(3) Copper Conductor Cable Thru Rated Concrete Floorl Assembly
Scale: Not to Scale

System No. F-C-2030

FC 2030

F Ratings — 1 and 2 Hr (See tem 1)
T Ratings — 0, 3/4, 1, 1-1/2 and 2 Hr (See Item 3)

Classified by Underwriters Laboratories, Inc. to UL 1479

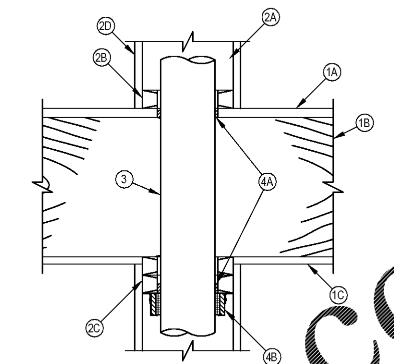

System tested with a pressure differential of 2.5 Pa between the exposed and the unexposed surfaces with the higher pressure on the exposed side.

1. Floor-Ceiling Assembly — The 1 or 2 hr fire-rated solid or trussed lumber joist floor-ceiling assembly shall be constructed of the materials and in the manner specified in the individual L500 Series Floor-Ceiling Designs in the UL Fire Resistance Directory. The F Rating of the firestop system is equal to the rating of the floor-ceiling and wall assemblies. The general construction features of the floor-ceiling assembly are summarized below:
   A. Flooring System — Lumber or plywood subfloor with finish floor of lumber, plywood or Floor Topping Mixture* as specified in the individual Floor-Ceiling Design. Diam of opening shall be 1 in. (25 mm) larger than the nom diam of through-penetrant (Item 3).
   B. Joists — Nom 10 in. (254 mm) deep (or deeper) lumber, steel or combination lumber and steel joists, trusses or Structural Wood Members* with bridging as required and with end firestopping.
   C. Gypsum Board* — Thickness, type, number of layers and fasteners shall be as specified in the individual Floor-Ceiling Design. Diam of opening shall be 1 in. (25 mm) larger than the nom diam of through-penetrant (Item 3).
   D. Furring Channels — (Not Shown) (As required) - Resilient galvanized steel furring installed in accordance with the manner specified in the individual L500 Series Designs in the Fire Resistance Directory.

Hilti Firestop Systems

Reproduced by HILTI, Inc. Courtesy of Underwriters Laboratories, Inc. April 06, 2018

Page: 1 of 2

System No. F-C-2030

FC 2030

2. Chase Wall — (Optional) - The through penetrant (Item 3) may be routed through a fire-rated or non-rated single, double or staggered wood stud/gypsum wallboard chase wall. The chase wall shall be constructed to include the following construction features:
   A. Studs — Nom 2 by 6 in. (51 by 152 mm) or double nom 2 by 4 in. (51 by 102 mm) lumber studs.
   B. Sole Plate — Nom 2 by 6 in. (51 by 152 mm) (or larger) or parallel 2 by 4 in. (51 by 102 mm) lumber plates, tightly butted. Diam of opening shall be 1 in. (25 mm) larger than the nom diam of through-penetrant (Item 3).
   C. Top Plate — The double top plate shall consist of two nom 2 by 6 in. (51 by 152 mm) (or larger) or parallel 2 by 4 in. (51 by 102 mm) lumber plates, tightly butted. Diam of opening shall be 1 in. (25 mm) larger than the nom diam of through-penetrant (Item 3).
   D. Gypsum Board* — One or two layers of min 1/2 in. (13 mm) gypsum board.
3. Through-Penetrants — One nom 1-1/2 in. (38 mm), 2 in. (51 mm), 3 in. (76 mm) or 4 in. (102 mm) diam nonmetallic pipe to be installed within the firestop system. Diam of opening through flooring system and through sole and top plates of chase wall to be max 2-1/8 in. (54 mm), 2-5/8 in. (67 mm), 4 in. (102 mm) or 5 in. (127 mm) for nom 1-1/2 in. (38 mm), 2 in. (51 mm), 3 in. (76 mm) or 4 in. (102 mm) diam nonmetallic pipe sizes, respectively. Pipe to be rigidly supported on both sides of the floor-ceiling assembly. The T Rating is dependent on the size of the through-penetrant. For 2 hr rated assemblies, the T Rating is 2 hr for 1-1/2 in. (38 mm) diam (and smaller) pipes and 1-1/2 hr for pipes greater than 1-1/2 in. (38 mm) diam. For 1 hr rated assemblies, the T rating is 1 hr for 1-1/2 in. (38 mm) diam (and smaller) pipes, 3/4 hr for 2 in. (51 mm) diam pipes and 0 hr for pipes greater than 2 in. (51 mm) diam. The following types of nonmetallic pipes may be used:
   A. Polyvinyl Chloride (PVC) Pipe — Schedule 40 solid-core or cellular core PVC pipe for use in closed (process or supply) or vented (drain, waste or vent) piping system.
   B. Chlorinated Polyvinyl Chloride (CPVC) Pipe — SDR17 CPVC pipe for use in closed (process or supply) or vented (drain, waste or vent) piping systems.
   C. Acrylonitrile Butadiene Styrene (ABS) pipe — Schedule 40 solid-core or cellular core ABS pipe for use in closed (process or supply) or vented (drain, waste or vent) piping systems.
   D. Flame Retardant Polypropylene(FRPP) Pipe — Schedule 40 FRPP pipe for use in closed (process or supply) or vented (drain, waste or vent) piping system.
4. Firestop System — The details of the firestop system shall be as follows:
   A. Fill, Void or Cavity Material* — Sealant — Min 3/4 in. (19 mm) thickness of fill material to be installed within the annular space between the pipe and the flooring (Item 1A) or sole plate. Min 5/8 in. (16 mm) thickness applied within the annular space, flush with the bottom surface of ceiling or lower top plate.
   HILTI CONSTRUCTION CHEMICALS, DIV OF HILTI INC — FS-ONE Sealantor FS-ONE MAX Intumescent Sealant.
   B. Firestop Device* — Firestop Collar — Firestop collar shall be installed in accordance with the accompanying installation instructions. Collar to be installed and latched around the pipe and secured to underside of ceiling or chase wall top plate (Item 2C) using the anchor hooks provided with the collar. (Minimum 2 anchor hooks for 1-1/2 (38 mm) and 2 in. (51 mm) diam pipes and 3 anchor hooks for 3 in. (76 mm) diam pipes). The anchor hooks are to be secured to the ceiling with min 3/16 in. (5 mm) diam steel toggler bolts or to the chase wall top plate with min No. 12 by min 1 in. (25 mm) long steel wood screws in conjunction with steel washers.
   HILTI CONSTRUCTION CHEMICALS, DIV OF HILTI INC — CP 643 50/1.5"N, CP643 63/2"N, CP 643 90/3"N or CP643 110/4"N Firestop Collar

* Indicates such products shall bear the UL or cUL Certification Mark for jurisdictions employing the UL or cUL Certification (such as Canada), respectively.

Hilti Firestop Systems

Reproduced by HILTI, Inc. Courtesy of Underwriters Laboratories, Inc. April 06, 2018

Page: 2 of 2

(4) Non-Metallic Conduit thru Rated Wooden Floor/Ceiling Assembly
Scale: Not to Scale

Notes:

1. *Refer to section XXXX of the specifications. For Quality Control requirements, refer to the Quality Control portion of the specification.*
2. *Details shown are typical details. If field conditions do not match requirements of typical details, approved alternate details shall be utilized. Field conditions and dimensions need to be verified for compliance with the details, including but not limited to the following:*
   ** Minimum and maximum Width of Joints*
   ** Type and thickness of fire-rated construction. The minimum assembly rating of the firestop assembly shall meet or exceed the highest rating of the adjacent construction.*
3. *If alternate details matching the field conditions are not available, manufacturer's engineering judgment drawings are acceptable. Drawings shall follow the International Firestop Council (IFC) Guidelines for Evaluating Firestop Systems Engineering Judgments.*
4. *References:*
   ** Underwriter's Laboratories Fire Resistance Directory, Volume 2*
   ** NFPA 101 Life Safety Code*
   ** All governing local and regional building codes*
5. *Firestop System installation must meet requirements of ASTM E-814 (UL 1479) tested assemblies that provide a fire rating equal to that of construction being penetrated.*
6. *All rated through-penetrations shall be prominently labeled with the following information:*
   ** ATTENTION: Fire Rated Assembly*
   ** UL System #*
   ** Product(s) used*
   ** Hourly Rating (F-Rating)*
   ** Installation Date*

Order Plans @ www.LDHline.com

Seal

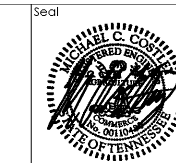

5-14-2020

2PA
POOLE & POOLE ARCHITECTURE
3736 Winterfield Road, Suite 102
Midlothian, Virginia 23113
Telephone 804.225.0215
www.2pa.net

Project: 1928
CADD File:
Drawn By: SW
Checked By: WM

Permit Release:
May 19, 2020
Construction Release Set:
May 19, 2020

Revisions

No.	Date	Description

ASI / RFI Revisions

No.	Date	Description

© 2019 Poole & Poole Architecture, LLC
Drawings and specifications are and shall remain the property of Poole & Poole Architecture, LLC and shall not be used or reproduced in whole or part in any form without prior written consent of Poole & Poole Architecture, LLC.

PHILLIPS GRADICK ENGINEERING, P.C. PGE # NC219019
2320 W. Morehead Street
Suite 200
Charlotte, NC 28208
(704) 900-5838 (T)
(704) 842-3807 (F)

This drawing, as an instrument of service is and shall remain the property of the Phillips Gradick Engineering, P.C. and shall not be reproduced, published or used in any way without the permission of Phillips Gradick Engineering, P.C. This Drawing is copyrighted and protected under section 120 of the U.S. Copyright Act USC. The protection includes but is not limited to design and construction techniques. Unauthorized use of these plans without the express written permission of Phillips Gradick Engineering, P.C. is prohibited.

Borough 33
an Apartment Community by
33 Broad MF, LLC
in Chattanooga, Tennessee

Drawing Title:
Electrical Penetration Details

E0.3A

ISSUED FOR CONSTRUCTION