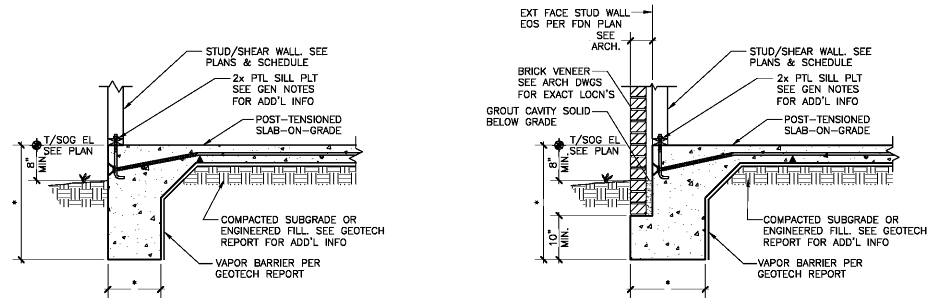


W/O BRICK VENEER

W/ BRICK VENEER

1 S6.1 SECTION @ EXTERIOR
SCALE: 3/4"=1'-0"

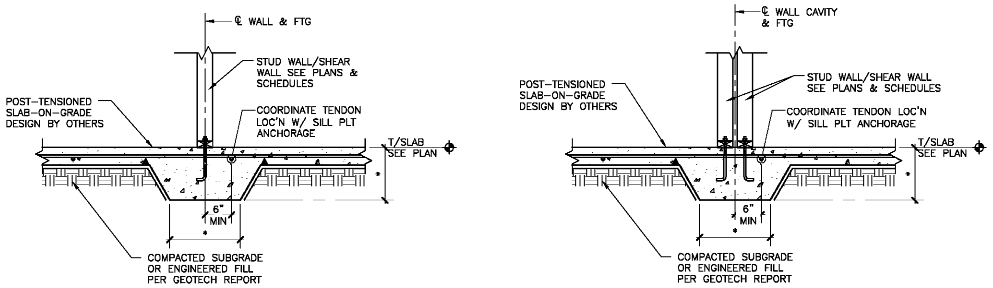


INTERIOR UNIT BEARING WALL

TENANT SEPARATION WALL

2 S6.1 SECTION @ INTERIOR BEARING WALL
SCALE: 3/4" = 1'-0"

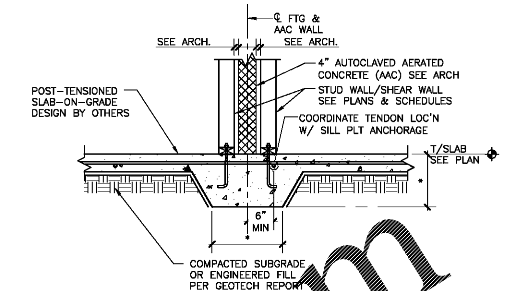


3 S6.1 SECTION @ FIRE WALL (TENANT SEPERATION WALL)
SCALE: 3/4" = 1'-0"

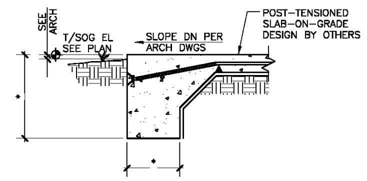


@ PATIO

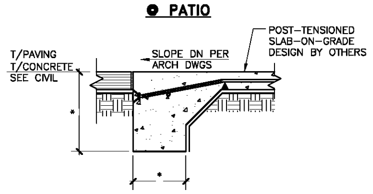


@ PAVEMENT

4 S6.1 SECTION @ EXTERIOR
SCALE: 3/4"=1'-0"

NOTE: SEE 1/S6.1 FOR ADD'L INFORMATION

NOTE: SEE 2/S6.1 FOR ADD'L INFORMATION

NOTE A: SLAB STEP VARIES AT BREEZEWAY SEE ARCH

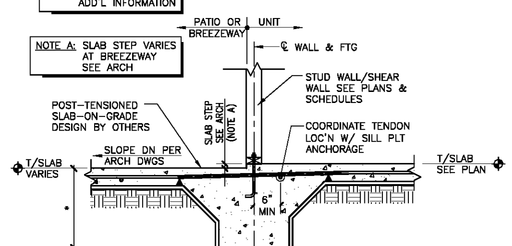


5 S6.1 SECTION @ PATIO/BREEZEWAY
SCALE: 3/4"=1'-0"

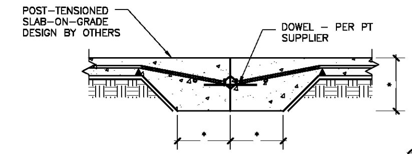


NOTE: SEE PT SOG PLANS FOR LOCATIONS OF SLAB JOINTS

6 S6.1 TYP SLAB ON GRADE JOINT DETAILS
SCALE: 3/4"=1'-0"

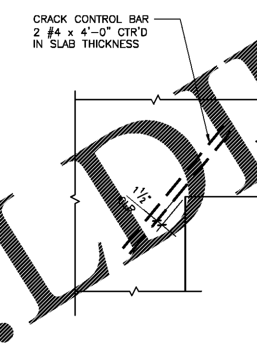


@ RE-ENTRANT SLAB CORNERS

7 S6.1 TYP SLAB ON GRADE CRACK CONTROL BARS
SCALE: 3/4"=1'-0"

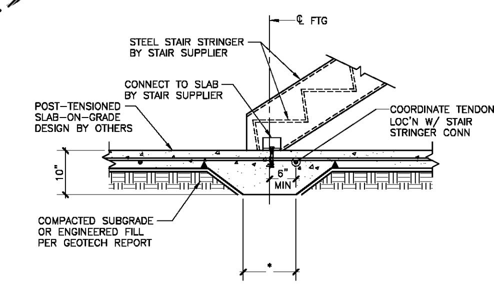


8 S6.1 TYP THICKENED SLAB @ STAIR STRINGER
SCALE: 3/4"=1'-0"

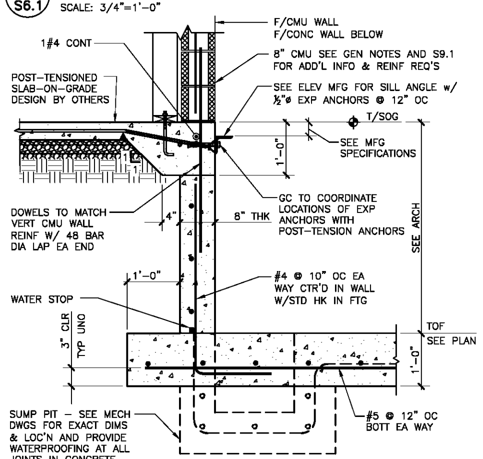


9 S6.1 SECTION @ ELEVATOR PIT
SCALE: 3/4"=1'-0"

NOTE: BASE PLATES TYPE A/B/C ARE TYP UNO

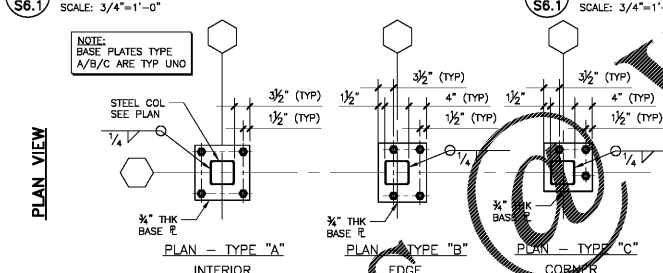


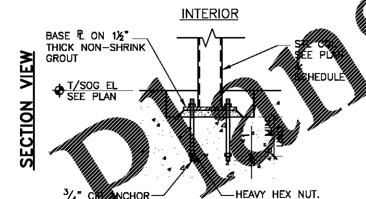


**NOTES:**

1. BRACE COLUMNS TEMPORARILY (DURING CONSTRUCTION) PER GENERAL NOTES ON S0.1.
2. PROVIDE STANDARD BOLT HOLE IN BASE PLATE. IF CONTRACTOR PREFERS OVERSIZED HOLES, PROVIDE WASHER ℞⅜"x3"x3" WELDED TO BASE PLATE W/ ¼" FILLET WELD AT TWO SIDES.
3. GROUT STRENGTH SHALL BE 3000 PSI MINIMUM.

10 S6.1 TYP STEEL COLUMN BASE PLATE SECTIONS & DETAILS
SCALE: 3/4"=1'-0"

NOTE: COL ORIENTATION VARIES SEE PLAN

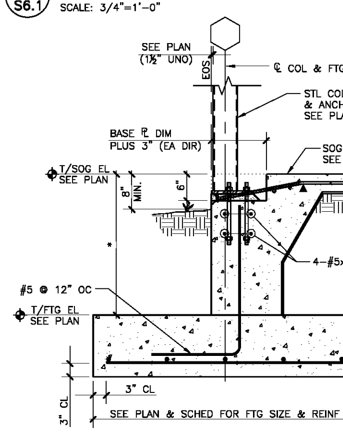


NOTE: TURNDOWN CONT REINF NOT SHOWN FOR CLARITY

NOTE: SEE 1/S6.1 FOR INFO NOT SHOWN

11 S6.1 TYP SECTION @ EXTERIOR COLUMN FOOTING
SCALE: 3/4"=1'-0"

NOTE: COL ORIENTATION VARIES SEE PLAN

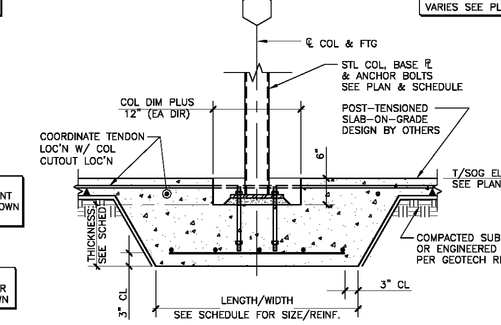


12 S6.1 TYP SECTION @ INTERIOR COLUMN FOOTING
SCALE: 3/4"=1'-0"

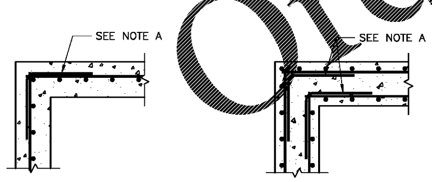


@ CORNER

@ CORNER

NOTE A: CORNER BARS SAME SIZE AND SPACING AS HORIZ REINF THUS: 2'-6" 2'-6"

13 S6.1 CONCRETE WALL CORNER DETAILS
SCALE: 3/4"=1'-0"

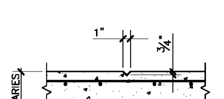


NOTE:
1. DISCONTINUE 50% OF HORIZ REINF @ CONTROL JOINTS.
2. REINF MAY BE LOCATED EF OF WALL. SEE SPECIFIC SECTIONS & DETAILS.

**CONTROL JOINT**

LOCATE @ 32'-0" O.C. MAX.

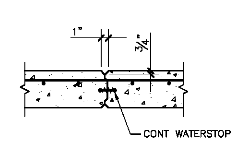


NOTE:
1. DISCONTINUE 50% OF HORIZ REINF @ CONSTRUCTION JOINTS.
2. REINF MAY BE LOCATED EF OF WALL. SEE SPECIFIC SECTIONS & DETAILS.

**CONSTRUCTION JOINT**

LOCATIONS SHALL BE DETERMINED BY CONTRACTOR BASED ON SEQUENCING & CONC PLACEMENT CAPACITY

14 S6.1 TYP CONCRETE WALL JOINT DETAILS
SCALE: 3/4"=1'-0"

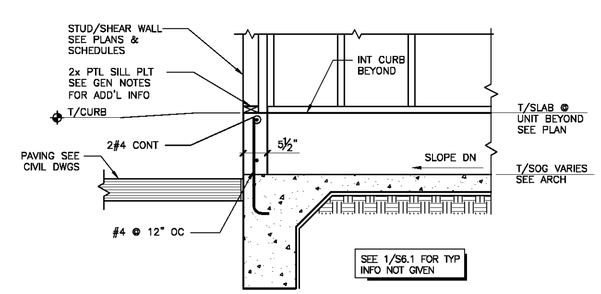


SEE 1/S6.1 FOR TYP INFO NOT GIVEN

15 S6.1 SECTION @ WALK THRU
SCALE: 3/4" = 1'-0"

NOTE: COL ORIENTATION VARIES SEE PLAN

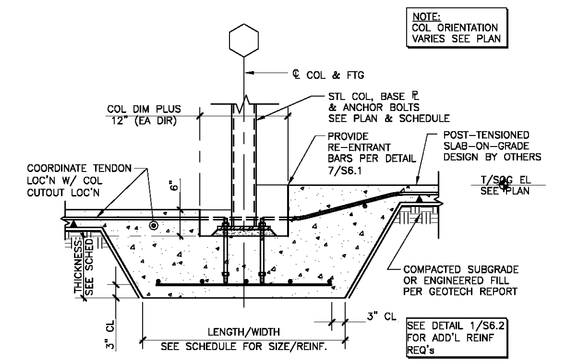


SEE DETAIL 1/S6.2 FOR ADD'L REINF REQ's

16 S6.1 SECTION @ STEEL @ WALK THRU
SCALE: 3/4" = 1'-0"

TYPICAL DRAWING NOTE

"*" DENOTES DIMENSION DETERMINED BY POST-TENSION SLAB DESIGNER. SEE POST-TENSIONED SLAB-ON-GRADE DWGS FOR THESE DIMENSIONS, TENDON LAYOUT AND ANY ADD'L REINFORCING REQUIREMENTS.

GC SHALL COORDINATE SLAB TENDONS W/ INTERIOR SHEAR WALL SILL PLATE ANCHORAGE BEFORE CONCRETE SLAB IS POURED

Order Plans @ WWW.LDILine.com

Seal

2PA
POOLE & POOLE ARCHITECTURE
3736 Winterfield Road, Suite 102
Midlothian, Virginia 23113
Telephone 804.325.0015
www.2pa.net
DC PERM #51972

DAVIS & CHURCH
STRUCTURAL ENGINEERS
7905 Westside Pkwy, Ste. 200
Alpharetta, GA 30009
(770) 642 - 1213

| | |
|---|---|
| Project: | 1928.00 |
| CADD File: | |
| Drawn By: | AVG |
| Checked By: | TQ |

Permit Release:
May 15, 2020
Construction Release Set:
May 15, 2020

Revisions

| No. | Date | Description |
|---|---|---|

ASI / RFI Revisions

| No. | Date | Description |
|---|---|---|

© 2019 Poole & Poole Architecture, LLC
Drawings and specifications are and shall remain the property of Poole & Poole Architecture, LLC and shall not be used or reproduced in whole or part in any form without prior written consent of Poole & Poole Architecture, LLC.

**Borough 33**
an Apartment Community by
33 Broad MF, LLC
in Chattanooga, Tennessee

Drawing Title:
TYPICAL FOUNDATION
SECTIONS & DETAILS

**S6.1**

ISSUED FOR CONSTRUCTION