GENERAL NOTES (CONTINUED)

21. STRUCTURAL ABBREVIATIONS

ADD'L, ADD – ADDITIONAL
AB, ABOLT – ANCHOR BOLT
ARCH – ARCHITECTURAL
@ – AT
BM – BEAM
BRG – BEARING
BLK – BLOCK
BLKNG – BLOCKING
BOTT, B – BOTTOM, BOTTOM BAR
BLDG – BUILDING
BTWN – BETWEEN
CANT – CANTILEVER
CG – CENTER OF GRAVITY
CL, CLR – CLEAR
COL – COLUMN
CONC – CONCRETE
COND – CONDITION
CONN – CONNECTION
CMU – CONCRETE MASONRY UNIT
CONST – CONSTRUCTION
CONT – CONTINUOUS
CONTR – CONTRACTOR
DB – DROP BEAM
DET, DT'L – DETAIL
DIA – DIAMETER
DIAG – DIAGRAM
DIM – DIMENSION
DSN – DESIGN
DWG – DRAWING
DWL – DOWEL
EA – EACH
EF – EACH FACE
ELEV, EL – ELEVATION
EMBED – EMBEDMENT
EOS – EDGE OF SLAB
EQ – EQUAL
ETC – ET CETERA
EW – EACH WAY
EXIST, EXT'G – EXISTING
EXP – EXPANSION
EXP JT, EJ – EXPANSION JOINT
EXT – EXTERIOR
F/ – FACE OF
F/WALL – FACE OF WALL
FB – FLUSH BEAM
FIN FL – FINISHED FLOOR
FFE – FINISHED FLOOR ELEVATION
FL, FLR – FLOOR
FRT – FIRE RETARDANT TREATED
FRG – FRAMING
FTG – FOOTING
FT – FEET, FOOT
FLG – FLANGE
GA – GAGE, GAUGE
GALV – GALVANIZED
GC – GENERAL CONTRACTOR
HD – HEAD
HDR – HEADER
HGT – HEIGHT
HI – HIGH
HK – HOOK
HORIZ – HORIZONTAL
HR – HOUR
IMP – INSULATED METAL PANEL
INFO – INFORMATION
INT – INTERIOR
JG – JOIST GIRDER
JST – JOIST
JT – JOINT
K–FT – KIP–FEET
K/FT – KIPS PER FOOT
K – KIPS
L – ANGLE
LG – LONG
LLO – LONG LEG OUT
LLV – LONG LEG VERTICAL
LO – LOW
LOC'N – LOCATION
MFG, MFR, MFG'R – MANUFACTURER
MECH – MECHANICAL
MPH – MILES PER HOUR
MAT'L – MATERIAL
MAX – MAXIMUM
MO – MECHANICAL OPENING
MTL – METAL
MIN – MINIMUM
MISC – MISCELLANEOUS
NA – NEUTRAL AXIS
NIC – NOT IN CONTRACT
NOM – NOMINAL
No. – NUMBER
NTS – NOT TO SCALE
OC – ON CENTER
OPNG – OPENING
OH – OPPOSITE HAND
PAF – POWDER ACTUATED FASTENER
PL, PLT – PLATE
PSF – POUNDS PER SQ. FOOT
PSI – POUNDS PER SQ. INCH
PT – POST TENSIONED
PTL – PRESSURE TREATED LUMBER
PTS – POINTS
REF – REFERENCE
RET – RETAINING
REV – REVISION
REINF – REINFORCING
REQ'D – REQUIRED
REQ'S – REQUIREMENTS
REBAR – REINFORCING BAR
SCHD, SCHED – SCHEDULE
SECT – SECTION
SLV – SHORT LEG VERTICAL
SLO – SHORT LEG OUT
SIM – SIMILAR
SOG – SLAB ON GRADE
SPECS – SPECIFICATIONS
STD – STANDARD
STIRR – STIRRUPS
STL – STEEL
ST STL – STAINLESS STEEL
STRUCT – STRUCTURAL
TBR – TO BE REMOVED
THK – THICK
THRD – THREADED
THRU – THROUGH
T&B – TOP AND BOTTOM
T/ – TOP OF
T/BM – TOP OF BEAM
T/CONC – TOP OF CONCRETE
T/FTG, TOF – TOP OF FOOTING
T/SLAB – TOP OF SLAB
T/STL – TOP OF STEEL
T/WALL, TOW – TOP OF WALL
TYP – TYPICAL
UNO – UNLESS NOTED OTHERWISE
UWA – UNDER WALL ABOVE
V – SHEAR
VERT – VERTICAL
W – WIDE
W/ – WITH
W/O – WITHOUT
WD – WOOD
WP – WORKING POINT
WT, WGT – WEIGHT
WWF – WELDED WIRE FABRIC

22. TYPICAL FASTENING SCHEDULE (U.N.O.)

(REFERENCE STANDARD: FBC TABLE 2304.10.1)

DESCRIPTION OF BUILDILNG ELEMENTS	NUMBER & TYPE OF FASTENER[1]	SPACING AND LOCATION
ROOF		
BLOCKING BETWEEN CEILING JOISTS, RAFTERS OR TRUSSES TO TOP PLATE OR OTHER FRAMING BELOW	3-8d COMMON 3-10d BOX 3-3" x 0.131" NAILS	EACH END, TOENAIL
BLOCKING BETWEEN RAFTERS OR TRUSS NOT AT THE WALL TOP PLATE, TO RAFTER OR TRUSS	3-8d COMMON 2-3" x 0.131" NAILS	EACH END, TOENAIL
	2-16d COMMON 3-3" x 0.131" NAILS	END NAIL
FLAT BLOCKING TO TRUSS AND WEB FILLER	16d COMMON 3-3" x 0.131" NAILS	FACE NAIL, @ 6" o.c.
CEILING JOISTS TO TOP PLATE	3-8d COMMON 3-10d BOX 3-3" x 0.131" NAILS	EACH JOIST, TOENAIL
CEILING JOIST NOT ATTACHED TO PARALLEL RAFTER, LAPS OVER PARTIONS (NO THRUST) (SEE FBC SECTION 2308.7.3.1, TABLE 2308.7.3.1)	3-16d COMMON 4-10d BOX 4-3" x 0.131" NAILS	FACE NAIL
CEILING JOIST ATTACHED TO PARALLEL RAFTER (HEEL JOINT) (SEE FBC SECTION 2308.7.3.1, TABLE 2308.7.3.1)	PER TABLE 2308.7.3.1	FACE NAIL
COLLAR TIE TO RAFTER	3-10d COMMON 4-10d BOX 4-3" x 0.131" NAILS	FACE NAIL
RAFTERS TO TOP PLATE (SEE FBC SECTION 2308.7.5, TABLE 2308.7.5)	3-10d COMMON 3-16d BOX 4-10d BOX 4-3" x 0.131" NAILS	TOENAIL
ROOF RAFTERS TO RIDGE VALLEY OR HIP RAFTERS; OR ROOF RAFTER TO RIDGE BEAM	2-16d COMMON 3-10d BOX 3-3" x 0.131" NAILS	END NAIL
	3-10d COMMON 4-16d BOX 4-10d BOX 4-3" x 0.131" NAILS	TOENAIL
WALL		
STUD TO STUD (NOT AT BRACED WALL PANELS)[5]	16d COMMON	16" o.c. FACE NAIL
	10d BOX 3" x 0.131" NAILS	12" o.c. FACE NAIL
STUD TO STUD AND ABUTTING STUDS AT INTERSECTING WALL CORNERS (AT BRACED WALL PANELS)[5]	16d COMMON	16" o.c. FACE NAIL
	16d BOX 3" x 0.131" NAILS	12" o.c. FACE NAIL
BUILT-UP SOLID SAWN HEADERS[4]	16d COMMON	16" o.c. EACH EDGE, FACE NAIL
	16d BOX	12" o.c. EACH EDGE, FACE NAIL
CONTINUOUS HEADER TO STUD	4-10d COMMON 4-10d BOX	TOENAIL
TOP PLATE TO TOP PLATE	16d COMMON	16" o.c. FACE NAIL
	10d BOX 3" x 0.131" NAILS	12" o.c. FACE NAIL
TOP PLATE, LAPS AT CORNERS AND INTERSECTIONS	2-16d COMMON 3-10d BOX 3-3" x 0.131" NAILS	FACE NAIL
TOP PLATE SPLICE @ NON-SHEAR WALL	8-16d COMMON 12-10d BOX 12-3" x 0.131" NAILS	EACH SIDE OF END JOINT, FACE NAIL (MINIMUM 24" LAP SPLICE LENGTH EACH SIDE OF END JOINT)
TOP PLATE SPLICE @ SHEAR WALL (UNIFORM WALL THICKNESS)	SEE DETAIL 8/S4.0B	
TOP PLATE SPLICE @ SHEAR WALL (2x4/2x6 TRANSITION @ SINGLE INTERIOR/NON-DEMISING)	SEE DETAIL 9A/S4.0B	
TOP PLATE SPLICE @ SHEAR WALL (2x4/2x6 TRANSITION @ DEMISING)	SEE DETAIL 9B/S4.0B	
BOTTOM PLATE TO JOIST, RIM JOIST, BAND JOIST OR BLOCKING (NOT AT BRACED WALL PANELS)	16d COMMON	16" o.c. FACE NAIL
	16d BOX 3" x 0.131" NAILS	12" o.c. FACE NAIL
BOTTOM PLATE TO JOIST, RIM JOIST, BAND JOIST OR BLOCKING AT BRACED WALL PANELS	2-16d COMMON 3-16d BOX 4-3" x 0.131" NAILS	16" o.c. FACE NAIL
STUD TO TOP OR BOTTOM PLATE (2x4 WALL)	2-10d BOX 2-3" x 0.131" NAILS	TOENAIL
	2-16d COMMON 2-10d BOX 2-3" x 0.131" NAILS	END NAIL
STUD TO TOP OR BOTTOM PLATE (2x6 WALL)	3-10d BOX 3-3" x 0.131" NAILS	TOENAIL
	2-16d COMMON 3-10d BOX 3-3" x 0.131" NAILS	END NAIL
STUD TO TOP OR BOTTOM PLATE (2x8 WALL)	4-10d BOX 4-3" x 0.131" NAILS	TOENAIL
	4-16d COMMON 5-10d BOX 5-3" x 0.131" NAILS	END NAIL
TOP PLATE, LAPS AT CORNERS AND INTERSECTIONS	2-16d COMMON 3-10d BOX 3-3" x 0.131" NAILS	FACE NAIL
FLOOR		
JOIST TO SILL, TOP PLATE, OR GIRDER	3-8d COMMON 3-10d BOX 3-3" x 0.131" NAILS	TOENAIL
RIM JOIST, BAND JOIST, OR BLOCKING TO TOP PLATE, SILL OR OTHER FRAMING BELOW	8d COMMON 10d BOX 3" x 0.131" NAILS	6" o.c. TOENAIL
1" x 6" SUBFLOOR OR LESS TO EACH JOIST	2-8d COMMON 2-10d BOX	FACE NAIL
2" SUBFLOOR TO JOIST OR GIRDER	2-16d COMMON	FACE NAIL
2" PLANKS (PLANK & BEAM – FLOOR & ROOF)	2-16d COMMON	EACH BEARING, FACE NAIL
BUILT-UP SOLID SAWN GIRDERS AND BEAMS	20d COMMON	32" o.c. FACE NAIL AT TOP AND BOTTOM STAGGERED ON OPPOSITE SIDES
	10d BOX 3" x 0.131" NAILS	24" o.c. FACE NAIL AT TOP AND BOTTOM STAGGERED ON OPPOSITE SIDES
	2-20d COMMON 3-10d BOX 3-3" x 0.131" NAILS	ENDS AND AT EACH SPLICE, FACE NAIL
LEDGER STRIP SUPPORTING JOISTS OR RAFTERS	3-16d COMMON 4-10d BOX 4-3" x 0.131" NAILS	EACH JOIST OR RAFTER, FACE NAIL
JOIST TO BAND JOIST OR RIM JOIST	3-16d COMMON 4-10d BOX 4-3" x 0.131" NAILS	END NAIL
BRIDGING OR BLOCKING TO JOIST, RAFTER OR TRUSS	2-8d COMMON 2-10d BOX 2-3" x 0.131" NAILS	EACH END, TOENAIL

23. TYPICAL FASTENING SCHEDULE (U.N.O.) – CONT

(REFERENCE STANDARD: FBC TABLE 2304.10.1)

DESCRIPTION OF BUILDILNG ELEMENTS	NUMBER & TYPE OF FASTENER[1]	SPACING AND LOCATION: EDGES (INCHES)	SPACING AND LOCATION: INTERMEDIATE SUPPORTS (INCHES)
WOOD STRUCTURAL PANELS AT NON-SHEAR WALL CONIDTIONS, SUBFLOOR, AND ROOF			
3/8" – 1/2" WOOD STRUCTURAL PANELS AT NON-SHEAR WALL CONDITIONS[3]	6d COMMON OR DEFORMED (SUBFLOOR AND WALL)	6	12
	8d COMMON OR DEFORMED (ROOF) OR RSRS-01 (2 3/8" x 0.113") NAIL (ROOF)	6	12
	2 3/8" x 0.113" NAIL (SUBFLOOR AND WALL)	6	12
	2 3/8" x 0.113" NAIL (ROOF)	4	8
19/32" – 3/4" WOOD STRUCTURAL PANELS AT NON-SHEAR WALL CONDITIONS[3]	8d COMMON 6d DEFORMED (2" x 0.113") (SUBFLOOR AND WALL)	6	12
	8d COMMON OR DEFORMED (ROOF) OR RSRS-01 (2 3/8" x 0.113") NAIL (ROOF)	6	12
	2 3/8" x 0.113" NAIL (ROOF)	4	8
7/8" – 1 1/4" WOOD STRUCTURAL PANELS AT NON-SHEAR WALL CONDITIONS[3]	10d COMMON 8d DEFORMED (2 1/2" x 0.131")	6	12
SUBFLOOR SHEATHING	SEE GENERAL NOTES 10.A.1		
ROOF SHEATHING	SEE GENERAL NOTES 10.A.2		
NON-STRUCTURAL PANEL SIDING TO FRAMING			
1/2" OR LESS	6d CORROSION-RESISTANT SIDING (1 7/8" x 0.106") 6d CORROSION-RESISTANT CASING (2" x 0.099")	6	12
5/8"	8d CORROSION-RESISTANT SIDING (2 3/8" x 0.128") 8d CORROSION-RESISTANT CASING (2 1/2" x 0.113")	6	12

FOOTNOTES:

1) COMMON OR BOX NAILS ARE PERMITTED TO BE USED EXCEPT WHERE OTHERWISE STATED.
2) SEE GENERAL NOTES 17 FOR ADDITIONAL INFORMATION ON WOOD FASTENERS.
3) SEE S4.0A SERIES FOR ADDITIONAL INFORMATION REGARDING WOOD SHEARWALL FASTENING.
4) SEE SHEET S4.0C BEAM/HEADER SCHEDULE NOTES FOR LVL BEAM FASTENING PATTERNS AND INFORMATION.
5) SEE SHEET S4.0C BUILT UP COLUMN NOTES FOR BUILT UP COLUMN FASTENING PATTERNS AND INFORMATION.

24. COMPONENTS & CLADDING SCHEDULE

(REFERENCE STANDARD: ASCE7-10)

ALL COMPONENTS & CLADDING PRESSURES ARE GIVEN AS ULTIMATE & SERVICE LEVEL PRESSURES PER ASCE 7-10

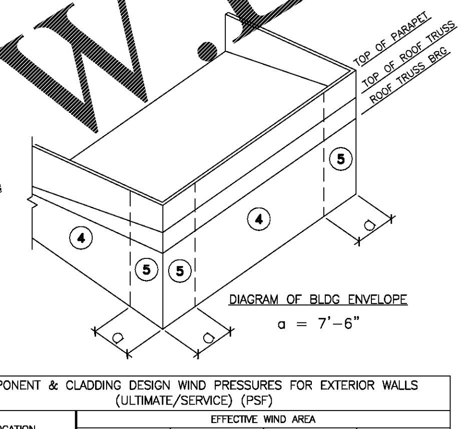

DIAGRAM OF BLDG ENVELOPE

a = 7'-6"

COMPONENT & CLADDING DESIGN WIND PRESSURES FOR EXTERIOR WALLS (ULTIMATE/SERVICE) (PSF)					
LOCATION		EFFECTIVE WIND AREA: 10 FT²	50 FT²	100 FT²	200 FT²
NEGATIVE	ZONE 4, p_6	−26.6 / −16.0	−24.0 / −14.4	−23.0 / −13.8	−21.9 / −13.1
	ZONE 5, p_6	−32.7 / −19.6	−27.7 / −16.6	−25.5 / −15.3	−23.3 / −14.0
POSITIVE	ZONE 4 & 5, p_5	+24.5 / +14.7	+22.0 / +13.2	+20.9 / +12.5	+19.8 / +11.9

NOTES:
1. POSITIVE PRESSURE DENOTES WIND TOWARD WALL SURFACE, AND NEGATIVE PRESSURE DENOTES WIND AWAY FROM WALL SURFACE.

24. COMPONENTS & CLADDING SCHEDULE – CONT

(REFERENCE STANDARD: ASCE7-10)

ALL COMPONENTS & CLADDING PRESSURES ARE GIVEN AS ULTIMATE & SERVICE LEVEL PRESSURES PER ASCE 7-10

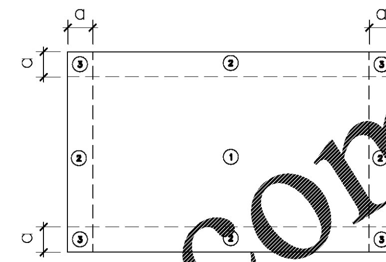

DIAGRAM OF ROOF PLAN

a = 16'-6"

COMPONENT & CLADDING GROSS DESIGN WIND PRESSURES ALONG ROOF (ULTIMATE/SERVICE) (PSF)				
LOCATION		EFFECTIVE WIND AREA: 10 FT²	50 FT²	100 FT²
NEGATIVE	ZONE 1	−26.8 / −16.1	−25.2 / −15.2	−24.5 / −14.7
	ZONE 2	−45.0 / −27.0	−33.9 / −20.3	−29.1 / −17.5
	ZONE 3	−45.0 / −27.0	−33.9 / −20.3	−29.1 / −17.5
POSITIVE	ZONE 1	+16.0 / +15.0	+16.0 / +15.0	+16.0 / +15.0
	ZONES 2 & 3	+24.5 / +14.7	+22.0 / +13.2	+22.0 / +13.2
OVERHANG	ZONE 2	−38.6 / −23.2	−37.0 / −22.2	−36.3 / −21.8
	ZONE 3	−38.6 / −23.2	−37.0 / −22.2	−36.3 / −21.8

NOTES:
1. POSITIVE PRESSURE DENOTES WIND TOWARD ROOF SURFACE, AND NEGATIVE PRESSURE DENOTES WIND AWAY FROM ROOF SURFACE.

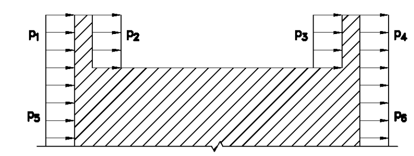

DIAGRAM OF BLDG SECTION

COMPONENT & CLADDING DESIGN WIND PRESSURES FOR PARAPET WALLS (ULTIMATE/SERVICE) (PSF)					
PARAPET LOCATION & LOAD CASE, WALL ZONE & WIND DIRECTION			EFFECTIVE WIND AREA: 10 FT²	50 FT²	100 FT²
WINDWARD PARAPET (LOAD CASE "A")	ZONE 4	POSITIVE, p_1	+20.9 / +12.6	+18.4 / +11.1	+17.2 / +10.4
		NEGATIVE SIDE, p_2	−41.8 / −25.1	−30.4 / −18.3	−25.6 / −15.4
	ZONE 5	POSITIVE, p_1	+20.9 / +12.6	+18.4 / +11.1	+17.2 / +10.4
		NEGATIVE, p_2	−41.8 / −25.1	−30.4 / −18.3	−25.6 / −15.4
LEEWARD PARAPET (LOAD CASE "B")	ZONE 4	POSITIVE, p_3	+20.9 / +12.6	+18.4 / +11.1	+17.2 / +10.4
		NEGATIVE SIDE, p_4	−23.0 / −13.8	−20.5 / −12.3	−19.3 / −11.6
	ZONE 5	POSITIVE, p_3	+20.9 / +12.6	+18.4 / +11.1	+17.2 / +10.4
		NEGATIVE, p_4	−29.3 / −17.6	−24.2/ −14.6	−21.9 / −13.2

NOTES:
1. POSITIVE PRESSURE DENOTES WIND TOWARD PARAPET WALL SURFACE, AND NEGATIVE PRESSURE DENOTES WIND AWAY FROM PARAPET WALL SURFACE.
2. LOAD CASES "A" & "B" ARE DEFINED IN SECTION 30.7.1.2 IN ASCE7-10.

25. DEFERRED SUBMITTALS

A. ALL DEFFERED SUBMITTALS SHALL BE SIGNED AND SEALED BY A REGISTERED, PROFESSIONAL ENGINEER IN THE PROJECT STATE.

B. THE DEFERRED SUBMITTALS ON THIS PROJECT INCLUDE:

1. POST TENSION SLAB ON GRADE
2. PRE-ENGINEERED WOOD FLOOR TRUSS FRAMING
3. PRE-ENGINEERED WOOD ROOF TRUSS FRAMING
4. SHEAR WALL AND ROOF TRUSS UPLIFT ANCHORAGE
5. STAIR/ BALCONY HAND RAILS/ GUARD RAILS
6. FIRE RETARDANT TREATMENT
7. STRUCTURAL STEEL CONNECTIONS

Order Plans @ WWW.LDILine.com

Seal

03/19/21

2PA
POOLE & POOLE ARCHITECTURE
3736 Winterfield Road, Suite 102
Midlothian, Virginia 23113
Telephone 804.323.0015
www.2pa.net

DAVIS & CHURCH
STRUCTURAL ENGINEERS
7905 Westside Pkwy, Ste. 200
Alpharetta, GA 30009
(770) 642-1213

Project: 1926.00
CADD File:
Drawn By: AVG
Checked By: TQ

Permit Release:
May 15, 2020
Construction Release Set:
May 15, 2020

Revisions
No. Date Description

ASI / RFI Revisions
No. Date Description

© 2019 Poole & Poole Architecture, LLC
Drawings and specifications are and shall remain the property of Poole & Poole Architecture, LLC and shall not be used or reproduced in whole or part in any form without prior written consent of Poole & Poole Architecture, LLC.

Borough 33
an Apartment Community by
33 Broad MF, LLC
in Chattanooga, Tennessee

Drawing Title:
GENERAL NOTES

S0.3

ISSUED FOR CONSTRUCTION