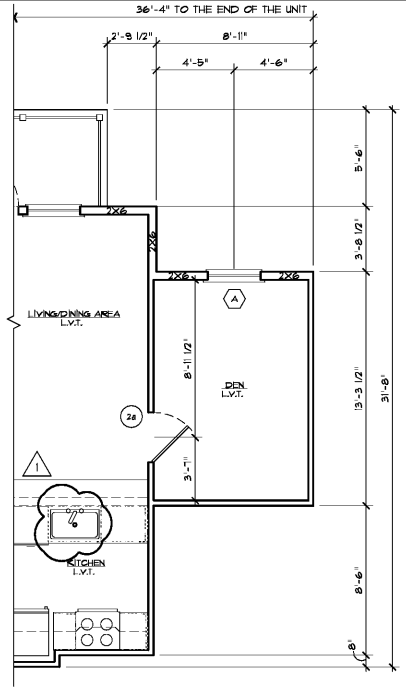

NOTE:
SEE STANDARD UNIT ON A1.4 FOR DIMENSIONING AND INTERIOR ELEVATIONS UNLESS OTHERWISE SHOWN.

Area Information	
heated:	818 S.F.
unheated:	52 S.F.
total:	870 S.F.

13 Unit A3 - Alt 2
Scale: 1/4" = 1'-0" Plan

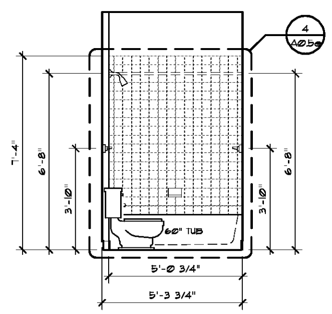

12 Master Bathroom
Scale: 3/8" = 1'-0" Elevation

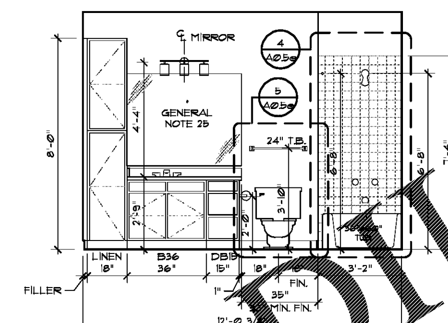

11 Master Bathroom
Scale: 3/8" = 1'-0" Elevation

GENERAL NOTES

1. Unit Plans are dimensioned to face of stud, unless noted otherwise. Typical framing is with 2x4 or 2x6 Wood Framing.
2. Interior Elevations are dimensioned to finish face of gypsum board. Typical.
3. Coordinate project specific manufacturer's dimensions required for air handler with size of mechanical closets and mechanical closet doors before building enclosure walls and furr downs. Adjust as required. Contractor to verify before purchase of doors that a 6'-8" door will provide adequate vertical access to project specific mechanical unit for servicing.
4. Coordinate project specific tub and shower units with framing openings dimensioned. Adjust as required.
5. Kitchen base cabinets are 24" deep and 34.5" tall (except at Type 'A' units where base cabinets to be 32.5" tall). Kitchen wall cabinets are 12" deep and 42" tall. Bath base cabinets are 21" deep and 32.5" tall typical.
6. Ventilated wire shelves are typical and noted as either wire shelves or "Shelf and Rod wire shelves per Closet Maid". 1R1S abbreviates one rod/one shelf. 1R2S abbreviates one rod/two shelves. 2R2S abbreviates two rods/two shelves.
7. All tub and shower areas shall be enclosed with moisture resistant Georgia-Pacific DensShield® Tile Backer board. If these walls are one hour rated then moisture resistant Georgia-Pacific 5/8" DensShield® Fireguard® Tile Backer board shall be used.
8. All floor finishes to be as noted on plans.
9. Typical 1x4 FJP base and door trim throughout unit. Paint-grade FJP at window sill (1x6), window apron (1x2), and bathroom base trim (1x4). Paint-grade shoe mould to match material at hard surfaces. Stain shoe mould at cabinets. Run window sill and apron trim continuous in front of double windows, typical.
10. All bath and kitchen cabinets color selections to be per owner.
11. All bath and kitchen countertops color selections to be per owner.
12. All corner kitchen cabinets to be non-usable corner cabinets
13. All cabinets with exposed end to be a finished end panel.
14. Brushed nickel exposed plumbing fixtures, door hardware (including hinges) and miscellaneous hardware, typical. Toilet accessories to be brushed nickel, typical.
15. All unit ceilings to have approved (by owner) smooth painted finish.
16. All interior unit walls to be approved (by owner) smooth painted finish surface gypsum board, painted base trim caulked along all joints unless otherwise noted.
17. Each unit to be provided with one class ABC 5 pound portable fire extinguisher, in kitchen.
18. No medicine cabinets.
19. Entry Doors shown are to be held 6" off hinges side of wall, interior doors are held 4" off hinge side of wall or are centered, unless otherwise noted.
20. Contractor to verify microwave height (offset) specifications, and install microwave to manufacturer's recommended clearance above cooktop. Adjust cabinet as required.
21. Contractor and Cabinet Sub-Contractor to coordinate final cabinet layout based on owner approved appliance selections.
22. Where Removable Base Cabinets are required per plan, finish flooring to be installed under cabinets. In addition, at all units tile to extend 6" under outside face of cabinet in all directions and under dishwasher, refrigerator and stove/range.
23. All Group R-2 interior finishes to meet/exceed a Class C fire rating. All Group A and B interior finishes to meet/exceed a Class B fire rating
24. All walls and floor/ceiling assemblies at unit/unit and unit/public spaces (ie corridor, stairwell, amenity, etc.) shall achieve a minimum STC/IIC of 50 as required per code.
25. All vanity mirrors to be 42" high and run the full width of the vanity.
26. Ice maker (IM) to be located per plan. Provide IM box when shown in rated wall.
27. All window heads and jambs to have drywall returns.
28. All changes in level at floor surfaces and thresholds at doorways intended for user passage shall comply with 2010 ADA, Section 303.
29. Provide typical blocking at hatched bathroom walls in unit plans per typical details in A0.5 series.
30. Shower doors and fixed panels to be 3/16" thick tempered glass typical.
31. All cabinets with exposed end to be a finished end panel.
32. Provide 2" Faux wood blinds at all windows.

ACCESSIBILITY DIAGRAM NOTES

1. (R) indicates removable base cabinet.
2. Indicates 30"x48" clear floor space at appliances and fixtures.
3. Indicates 30"x48" clear floor space outside of door swing.
4. Indicates 30"x60" clear floor space in front of tub with a parallel approach.
5. At resident's request, remove laundry room door(s) for additional clearance.

REFLECTED CEILING PLAN LEGEND

- Coverplate for future fixture
- Surface-mounted light fixture (Larger Surface-Mountaged Light Fixture at all Living Rooms)
- Exhaust Fan/ Light Combo
- Pendant light fixture
- Ceiling Fan/Light

Notes:
1. Ceiling fans, lights, or fixtures to be centered in room, closet, or hallway, unless otherwise noted.
2. Pendant lighting to be centered on kitchen island wall below. See RCP for spacing.

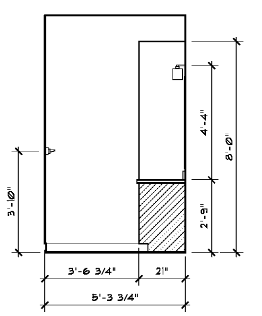

10 Master Bathroom
Scale: 3/8" = 1'-0" Elevation

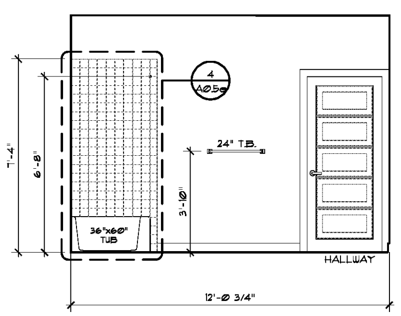

9 Master Bathroom
Scale: 3/8" = 1'-0" Elevation

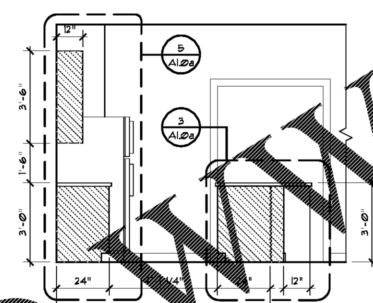

8 Kitchen
Scale: 3/8" = 1'-0" Elevation

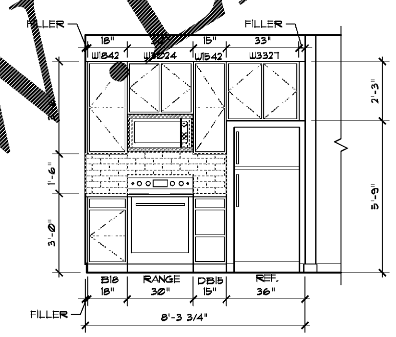

7 Kitchen
Scale: 3/8" = 1'-0" Elevation

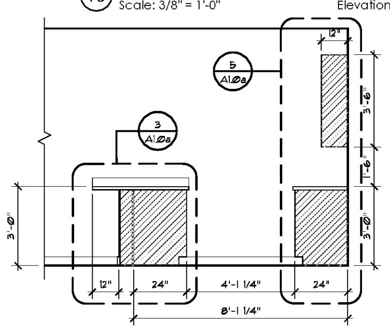

6 Kitchen
Scale: 3/8" = 1'-0" Elevation

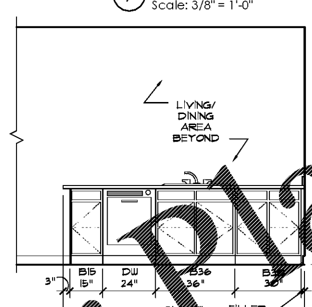

5 Kitchen
Scale: 3/8" = 1'-0" Elevation

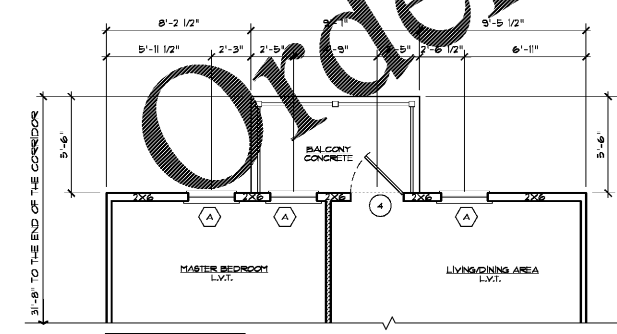

NOTE:
SEE STANDARD UNIT ON A1.4 FOR DIMENSIONING AND INTERIOR ELEVATIONS UNLESS OTHERWISE SHOWN.

Area Information	
heated:	698 S.F.
unheated:	52 S.F.
total:	750 S.F.

4 Unit A3 - Alt 1
Scale: 1/4" = 1'-0" Plan

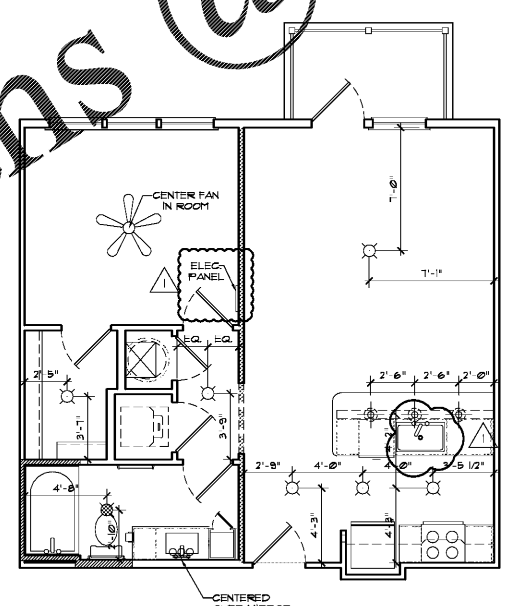

3 Unit A3 - Reflected Ceiling Plan
Scale: 1/4" = 1'-0" Plan

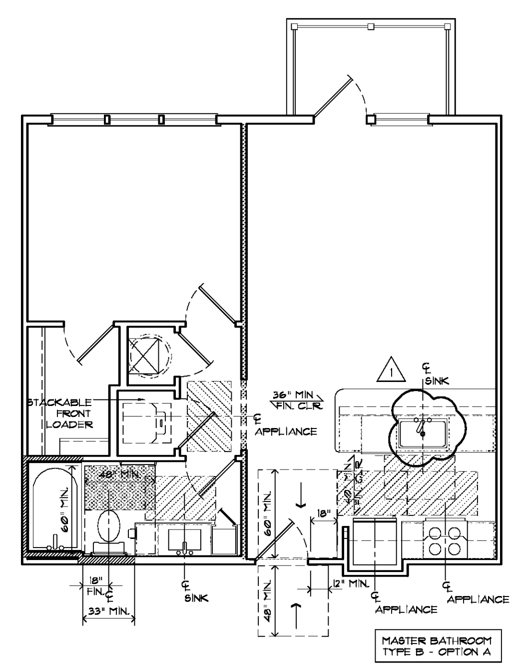

2 Unit A3 - Mobility Feature Diagram
Scale: 1/4" = 1'-0" Plan

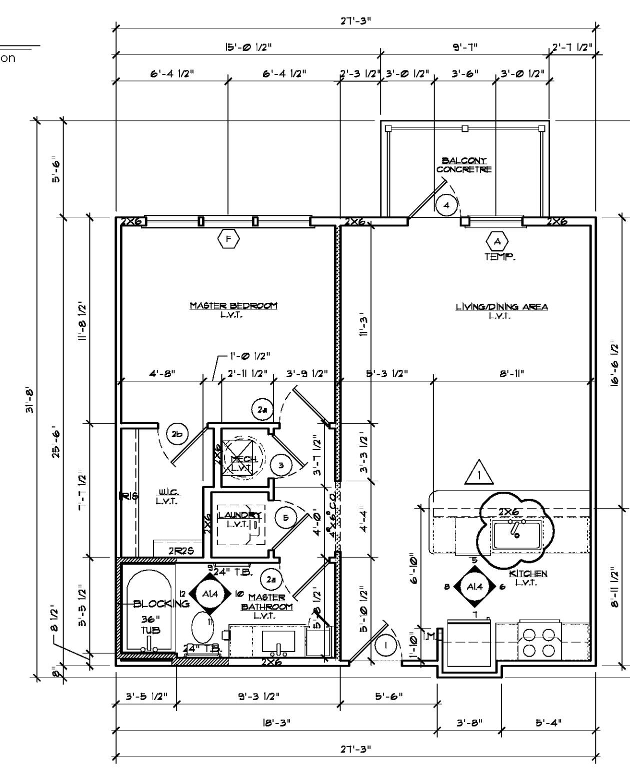

Area Information	
heated:	697 S.F.
unheated:	52 S.F.
total:	749 S.F.

1 Unit A3 - Standard Unit
Scale: 1/4" = 1'-0" Plan

Seal
March 19, 2021

2PA
POOLE & POOLE ARCHITECTURE
3736 Winterfield Road, Suite 102
Midlothian, Virginia 23113
Telephone 804.225.0215
www.2pa.net

Project:	1928.00
CADD File:	MSUN-A3
Drawn By:	AD
Checked By:	LM

Permit Release:
May 15, 2020
Construction Release Set:
May 15, 2020

Revisions

No.	Date	Description
1	03/19/21	Owner Comments

ASI / RFI Revisions

No.	Date	Description

© 2019 Poole & Poole Architecture, LLC
Drawings and specifications are and shall remain the property of Poole & Poole Architecture, LLC and shall not be used or reproduced in whole or part in any form without prior written consent of Poole & Poole Architecture, LLC.

Borough 33
an Apartment Community by
33 Broad MF, LLC
in Chattanooga, Tennessee

Drawing Title:
UNIT A3
Floor Plan, Interior Elevations & General Notes

A1.4

ISSUED FOR CONSTRUCTION

Order Plans @ WWW.LDHLine.com