Order Plans @ WWW.LDILine.com

GENERAL NOTES

1. Unit Plans are dimensioned to face of stud, unless noted otherwise. Typical framing is with 2x4 or 2x6 Wood Framing.
2. Interior Elevations are dimensioned to finish face of gypsum board. Typical.
3. Coordinate project specific manufacturer's dimensions required for air handler with size of mechanical closets and mechanical closet doors before building enclosure walls and furr downs. Adjust as required. Contractor to verify before purchase of doors that a 6'-8" door will provide adequate vertical access to project specific mechanical unit for servicing.
4. Coordinate project specific tub and shower units with framing openings dimensioned. Adjust as required.
5. Kitchen base cabinets are 24" deep and 34.5" tall (except at Type 'A' units where base cabinets to be 32.5" tall). Kitchen wall cabinets are 12" deep and 42" tall. Bath base cabinets are 21" deep and 32.5" tall typical.
6. Ventilated wire shelves are typical and noted as either wire shelves or "Shelf and Rod wire shelves per Closet Maid". 1R1S abbreviates one rod/one shelf. 1R2S abbreviates one rod/two shelves. 2R2S abbreviates two rods/two shelves.
7. All tub and shower areas shall be enclosed with moisture resistant Georgia-Pacific DensShield® Tile Backer board. If these walls are one hour rated then moisture resistant Georgia-Pacific 5/8" DensShield® Fireguard® Tile Backer board shall be used.
8. All floor finishes to be as noted on plans.
9. Typical 1x4 FJP base and door trim throughout unit. Paint-grade FJP at window sill (1x6), window apron (1x2), and bathroom base trim (1x4). Paint-grade shoe mould to match material at hard surfaces. Stain shoe mould at cabinets. Run window sill and apron trim continuous in front of double windows, typical.
10. All bath and kitchen cabinets color selections to be per owner.
11. All bath and kitchen countertops color selections to be per owner.
12. All corner kitchen cabinets to be non-usable corner cabinets
13. All cabinets with exposed end to be a finished end panel.
14. Brushed nickel exposed plumbing fixtures, door hardware (Including hinges) and miscellaneous hardware, typical. Toilet accessories to be brushed nickel, typical.
15. All unit ceilings to have approved (by owner) smooth painted finish.
16. All interior unit walls to be approved (by owner) smooth painted finish surface gypsum board, with painted base trim caulked along all joints unless otherwise noted.
17. Each unit to be provided with one class ABC 5 pound portable fire extinguisher, in kitchen.
18. No medicine cabinets.
19. Entry Doors shown are to be held 6" off hinges side of wall, interior doors are held 4" off hinge side of wall or are centered, unless otherwise noted.
20. Contractor to verify microwave height (offset) specifications, and install microwave to manufacturer's recommended clearance above cooktop. Adjust cabinet as required.
21. Contractor and Cabinet Sub-Contractor to coordinate final cabinet layouts based upon owner approved appliance selections.
22. Where Removable Base Cabinets are required per plan, finish flooring to be installed under cabinets. In addition, at all units tile to extend 6" under outside face of cabinet in all directions and under dishwasher, refrigerator and stove/range.
23. All Group R-2 interior finishes to meet/exceed a Class C fire rating. All Group A and B interior finishes to meet/exceed a Class B fire rating
24. All walls and floor/ceiling assemblies at unit/unit and unit/public space (ie corridor, stairwell, amenity, etc.) shall achieve a minimum STC/IIC of 50 as required per code.
25. All vanity mirrors to be 42" high and run the full length of the vanity.
26. Ice maker (IM) to be located per plan. Provide rated box when shown in rated wall.
27. All window heads and jambs to have drywall returns.
28. All changes in level at floor surfaces and thresholds at doorways intended for user passage shall comply with 2010 ADA, Section 303.
29. Provide typical blocking at hatched bathroom walls in unit plans per typical details in A0.5 series.
30. Shower doors and fixed panels to be 3/16" thick tempered glass typical.
31. All cabinets with exposed end to be a finished end panel.
32. Provide "2" Faux wood blinds on all Widnows.

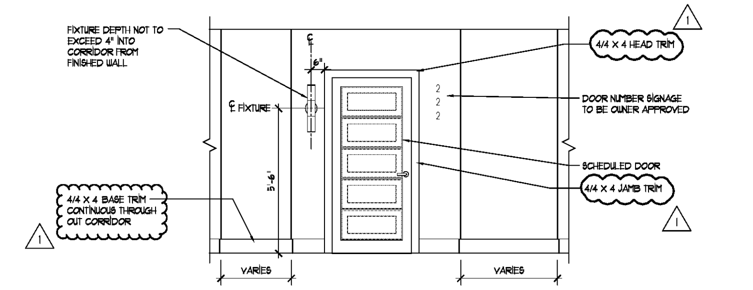

10 Unit Entry Door
Scale: 3/8" = 1'-0" Elevation

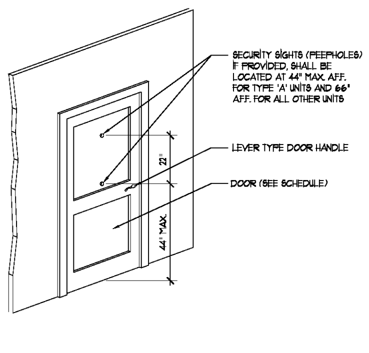

9 Unit Entry Door - Detail
Scale: 3/8" = 1'-0" Detail

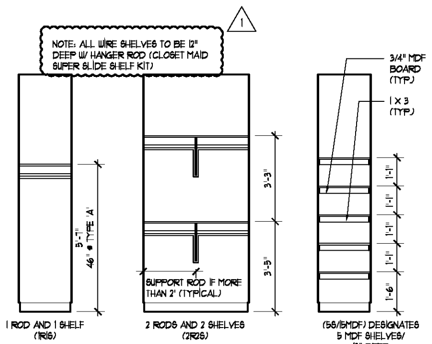

8 Closet Shelving
Scale: 3/8" = 1'-0" Elevation

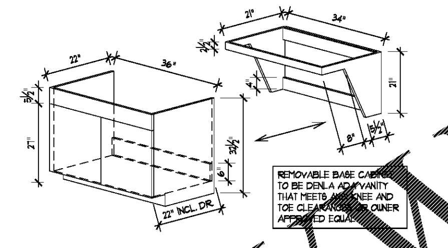

7 Removable Base Cabinet
Not to Scale Isometric Detail

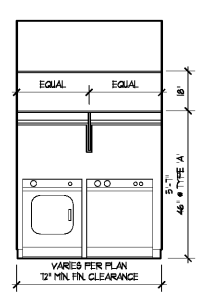

6 Laundry Shelving
Scale: 3/8" = 1'-0" Elevation

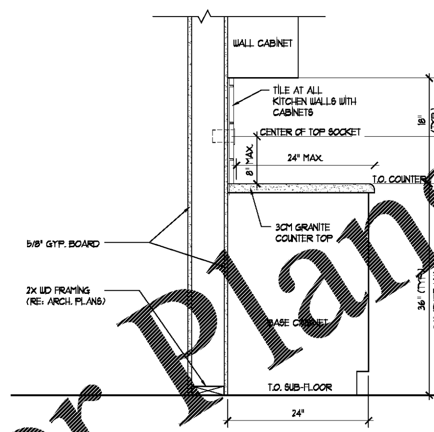

5 Typical Kitchen Countertop
Scale: 1" = 1'-0" Detail

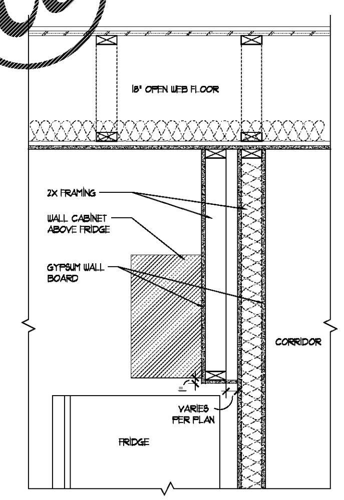

4 Wall Cabinet Above Fridge
Scale: 1" = 1'-0" Detail

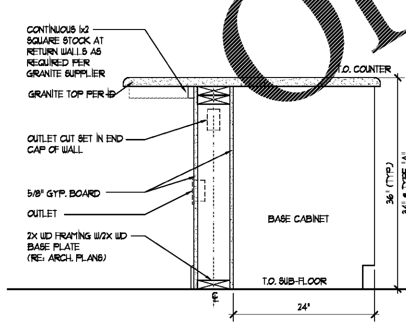

3 Typical Kitchen Countertop
Scale: 1" = 1'-0" Detail

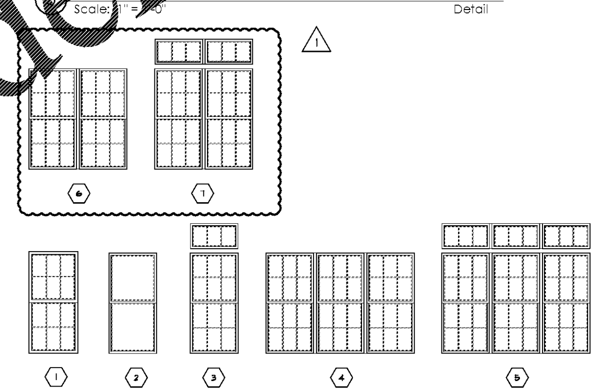

2 Window Elevations
NOT TO SCALE Elevation

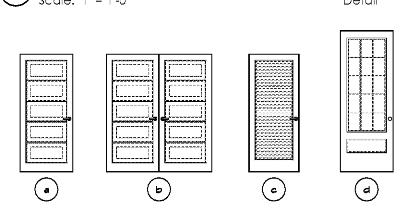

1 Door Elevations
NOT TO SCALE Elevation

DOOR SCHEDULE

Typical Notes:

1. Accessible entrances shall comply with IBC 2012, Chapter 11. Manual doors and gates in public use areas shall comply with ADAAG 1994, Section 404.2 and automatic and power-assisted doors and gates in public use areas shall comply with ADAAG 1994, Section 404.3. Manual doors, doorways, and gates in common use spaces and on the public side of dwelling unit entry doors to comply with ANSI 2009, Section 404.2. Automatic doors and gates in common use spaces shall comply with ANSI 2009, Section 404.3.
2. Usable doors (within the interior of an accessible dwelling unit) must provide 32" clear door opening width per IBC2012, Sections 1105.1.6 and 404 and ANSI 2009, Section 1002.5. Usable doors (within the interior of the a type 'A' dwelling unit) must provide 32" clear door opening width per IBC 2012, Section 1105.1.6 and ANSI 2009, Sections 1003.5 and 404. Usable doors (within the interior of a type 'B' dwelling unit) must provide 31-3/4" clear door opening width per IBC 2012, Section 1105.1.6 and ANSI 2009, Section 1004.5.1.
3. Common use area doors and tenant primary entry doors (public side only) to provide maneuvering clearance at doorways to comply with IBC 2012, Sections 1005, 1105.1.6, and 1107 and ANSI 2009, Sections 404.2.3, 404.3.2, 1102.5, 1103.5, 1104.5.
4. Common use area doors and tenant primary entry doors to provide thresholds at doorways to comply with IBC2012, Section 1105 and ANSI 2009, Sections 404.2.4, 403.2, 1002.5, 1003.5, 1004.5.
5. Tenant secondary exterior doors (patio, balcony doors, etc.) to provide thresholds at doorways to comply with IBC 2012, Section 1105 and ANSI 2009, Sections 404.2.4, 403.2, 1002.5, 1003.5, 1004.5.
6. Operable parts, including door hardware, on common use area doors and tenant primary entry doors to comply with IBC 2012, Section1005 and ANSI 2009, Section 309, including:
   a. ANSI 2009, Section 309.2: Provide clear floor space complying with ANSI Section 305.
   b. ANSI 2009, Section 309.3: Operable parts shall be placed within the reach ranges specified in ANSI 2003, Section 308.
   c. ANSI 2009, Section 309.4: Operable parts shall be operable with one hand and shall not require grasping, pinching, or twisting of the wrist. The force required to activate operable parts shall be 5.0 pounds maximum.
7. Common use area doors and tenant primary entry doors to comply with IBC 2012, Sections 1005 and 1005.1.6 and ANSI 2009, Section 404 including:
   a. ANSI 2009, Section 404.2.6: Door hardware.
   b. ANSI 2009, Section 404.2.7: Closing speed.
   c. ANSI 2009, Section 404.2.8: Door opening force.
   d. ANSI 2009, Section 404.2.9: Door surface.
   e. ANSI 2009, Section 404.2.10: Vision lites.
8. For doors in accessible public spaces and type 'A' dwelling units, door surfaces within 10" of the floor, measured vertically, shall be a smooth surface on the push side extending the full width of the door. Parts creating horizontal or vertical joints in such surfaces shall be within 1/16" of the same plane as the other. Tempered glass doors without stiles and having a bottom rail or shoe with the top [illegible] edge tapered at no less than 60 degrees from the horizontal shall not be required to meet the 10" bottom rail height requirement.

9. Provide tempered glass per 2012 IBC 2406.1 where noted on plans.

10. Refer to elevations for muntin locations.

11. Final door & hardware selection to be brushed nickel or design approved alternate.

12. Five (5) panel door typical design or owner approved alternate.

13. Provide door viewer and door knocker at unit entry doors in brushed nickel or design team approved alternate.

14. Hardware manufacturer to be Delta & Kwikset, or design team approved alternate.

15. Provide delta style lever knobs at all units.

16. Provide hinges as required if not provided with door set. (1) Pair per leaf for interior doors. (1-1/2) Pair per leaf for exterior doors.

17. Provide (1) stop for each interior door.

18. Releasing device for latch to be mounted between 34" and 48" above finish floor.

19. Undercut laundry door as required and provide transfer grill above door to meet washer/dryer manufacturer specifications.

20. Refer to plan for door swing direction, U.N.O.

21. 32" min. clear opening required w/ hardware installed.

22. All door transoms to be 12" height, U.N.O.

23. Provide weather-stripping, overhead door rain drips, and dr[illegible] door bottoms [illegible] exterior [illegible]

24. All door and hardware selection to be coordinated with interior design drawings.

25. Rated Doors must be tested in compliance with NFPA 252 or UL 10[illegible]

26. Doors with access control shall have either electric strikes or magnetic [illegible] GC to coordinate lock and frame type.

24. Provide shades on [illegible] balcony doors (but [illegible] transom windows).

25. Provide an alternate [illegible] provide electronic do[illegible]tries like [illegible]lage or Kaba/Dorma for the unit doors.

Mark O	Pair / Triple	Width	Height	Thickness	Door Slab Type	Hollow Metal	Hollow Core	Solid Core	Full-Lite/Tempered	Louvered Wood	Per Manufacturer	Transom	Elevation Mark A1.0a	Door Operation	Swings	Sliding Glass Door	Bi-Fold	Bypass Slider	Pocket	Barn	Side Lights	Interior Door Hardware	Dummy Lever	Privacy Lever	Passage Lever	Keyed Lever	Deadbolt (Smart Key)	Door Viewer	Self Closing Hinges	Wall Mounted Doorstop	Hinge Mounted Doorstop	Door Bolt	Head Mounted Door Catches	Bypass Tack, floor guides & bumper stops	hardware per slider Manufacturer	Garage Door Opener	Exterior Door Hardware	Weather Stripping	Smoke Seal	Saddle Threshold & Rain Hood	Bumper Threshold	Specialty Door Hardware	Flat Tack Barn Door Hardware	Pocket Door Hardware	Factory Mulled Sidelites	1'-2" Sidelite	Rating In Minutes ≥ 90 Is 'B' Label	Door Location
Typical Unit Doors																																																
1		3'-0"	6'-8"	1-3/4"		●							a		●										●		●	●	●	●									●		●						20	Unit Entry
2a		2'-10"	6'-8"	1-3/8"			●						a		●									●							●																N/A	Bathroom/Bedroom
2b		2'-10"	6'-8"	1-3/8"			●						a		●										●						●																N/A	Closet
3		2'-6"	6'-8"	1-3/8"						●			c		●										●		●				●																N/A	HVAC Closet
4		3'-0"	8'-0"	1-3/4"					●				d		●										●		●			●							●	●			●						N/A	Balcony
4a		3'-0"	8'-0"	1-3/4"					●			12"	d		●										●		●			●							●	●			●						N/A	Balcony
5		2'-10"	6'-8"	1-3/8"			●						a		●										●	●					●																N/A	Laundry
6a		3'-0"	6'-8"	1-3/8"			●						a		●									●							●																N/A	Bathroom/Bedroom @Accessible Units
6b		3'-0"	6'-8"	1-3/8"			●						a		●										●						●																N/A	Closet/Utility @ Accessible Units
7	PR	2'-8"	6'-8"	1-3/8"			●						b		●								●								●		●														N/A	Closet
8a		2'-6"	6'-8"	1-3/8"			●						a		●										●						●																N/A	Closet
8b	PR	2'-6"	6'-8"	1-3/8"			●						b		●								●								●		●														N/A	Laundry
9a		2'-0"	6'-8"	1-3/8"			●						a		●								●								●		●														N/A	Closet
9b	PR	2'-0"	6'-8"	1-3/8"			●						b		●								●								●		●														N/A	Closet

WINDOW SCHEDULE

Mark	Pair / Triple	Width	Height		Single Hung	Fixed	Fixed Clerestory	Vinyl Shutter	Transom	Elevation Mark A1.0a	Remarks:
Window											
A		2'-8"	6'-0"		●					1	See elevations for transom sizes
B		1'-4"	6'-0"		●					2	
C		1'-10"	6'-0"		●					2	
D		2'-8"	6'-0"		●				12"	3	
E		1'-4"	6'-0"		●				12"	3	
F		8'-6"	6'-0"		●					4	
G		8'-6"	6'-0"		●				12"	5	
H		5'-7"	6'-0"		●					6	
I		5'-7"	6'-0"		●				12"	7	

Notes:

1. Provide Insulated Glazing at All Windows.
2. Provide Insect Screens at all operable windows.
3. Provide Tempered Glass per IBC 2406.1 where noted in plans and elevations
4. Provide redundant locks (less than 48" A.F.F.) at one window in each sleeping, living or dining space in all Type "A" units per 1003.13 ANSI A117.1 See unit plans for locations.
5. All operable windows to include window fall prevention devices that comply with ASTM F 2090.
6. All glazing to meet or exceed U-Factor and SHGC listed in the insulation table sheet A0.3a
7. Windows to be either Aluminum or Vinyl, Color TBD by Owner/Architect prior to ordering.
8. All Escape Windows From Sleeping Rooms Shall Have a Minimum Clear Opening of 5.7 sq. ft.

Seal

March 19, 2021

2PA
POOLE & POOLE ARCHITECTURE
3736 Winterfield Road, Suite 102
Midlothian, Virginia 23113
Telephone 804.225.0215
www.2pa.net

Project: 1928.00
CADD File: SCHED
Drawn By: AD
Checked By: LM

Permit Release:
May 15, 2020
Construction Release Set:
May 15, 2020

Revisions

No.	Date	Description
1	03/19/21	Owner Comments

ASI / RFI Revisions

No.	Date	Description

©2019 Poole & Poole Architecture, LLC
Drawings and specifications are and shall remain the property of Poole & Poole Architecture, LLC and shall not be used or reproduced in whole or part in any form without prior written consent of Poole & Poole Architecture, LLC.

Borough 33
an Apartment Community by
33 Broad MF, LLC
in Chattanooga, Tennessee

Drawing Title:
Door, Hardware & Window Schedules, General Notes & Typical Unit Details

A1.0a

ISSUED FOR CONSTRUCTION