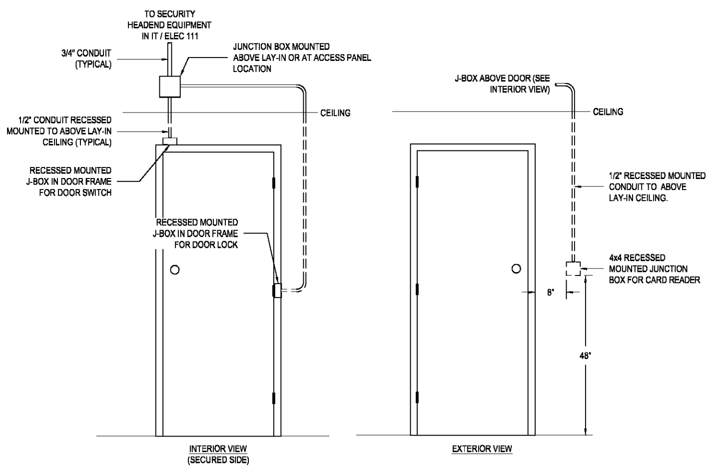

8 TYPICAL SECURITY DOOR CONDUIT DETAIL

E4.2 SCALE: N.T.S.

NOTE TO DETAIL 8/E4.2

1. EXCEPT AS OTHERWISE NOTED, ROUGH-IN CONDUIT / BOX REQUIREMENTS SHOWN ARE GENERIC AND INTENDED TO PROVIDE THE CONTRACTOR WITH TYPICAL REQUIREMENTS FOR SECURITY DOORS. CONTRACTOR SHALL CONFIRM ALL CONDUIT / BOX REQUIREMENTS WITH SECURITY EQUIPMENT / DOOR HARDWARE VENDORS PRIOR TO ROUGH-IN. ALL SURFACE MOUNTED BOXES / CONDUIT SHALL BE SUPPORTED WITH STAINLESS STEEL HARDWARE (SCREWS, ANCHORS, ETC.) AND PAINTED TO MATCH ADJACENT SURFACE.

THROUGH-PENETRATION FIRESTOP SYSTEMS
System No. W-J-1007

(Formerly System No. 257)
F Rating– 2 Hr
T Rating – 0, 1/4 and 2 Hr (See Item 3C)

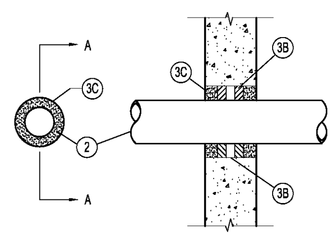

SECTION A-A

1. **Wall Assembly** – Min 5 in. thick reinforced lightweight or normal weight (100–150 pcf) concrete. Wall may also be constructed of any UL Classified **Concrete Blocks***. Max diam. of opening is 8 in. See **Concrete Blocks** (CAZT) category in the Fire Resistance Directory for names of manufacturers.
2. **Through Penetrants** – One metallic pipe, conduit or tubing to be installed either concentrically or eccentrically within the firestop system. Pipe conduit or tubing to be rigidly supported on both sides of wall assembly. The annular space between pipe, conduit or tubing and periphery of opening shall be as shown in the table below. The following types and sizes of metallic pipes, conduits or tubing may be used:
   A. **Steel Pipe** – Nom 1 in. diam (or smaller) Schedule 40 (or heavier) steel pipe.
   B. **Conduit** – Nom. 4 in. diam (or smaller) steel electrical metallic tubing or steel conduit.
   C. **Copper Tubing** – Nom 4 in. diam (or smaller) Type L (or heavier) copper tubing
3. **Firestop System** – The hourly F and T Rating for the firestop systems are dependant upon the type and size of pipe, annular space, fill material thickness and fill material type as described in the table below. When the annular space in the table shows a range of distances, the penetrating item may be installed either concentrically or eccentrically within the firestop system. The firestop systems shall consist of the following:
   A. **Steel Sleeve or Wire Mesh** – No. 8 steel wire mesh having a min. 1 in lap along the longitudinal seam. Length of sleeve to be 1/4 to 1/2 in. less than overall thickness of wall such that, when installed in circular opening, the ends of the sleeve are recessed 1/8 to 1/4 in. from each surface of the wall. Sleeve may also be formed of min. 0.034 in. thick (20 MSG) galvanized steel.
   B. **Packing Material** – Mineral wool batt insulation firmly packed into opeing as a permanent form at the thickness shown in the table below. Packing material to be recessed from both surfaces of wall as required to accommodate the required thickness of fill material. As an option to the above, backer rod and/or foamed plastic backer material may be used.
   C. **Fill, Void or Cavity Material – Caulk*** – Applied within the annulus, flush with both surfaces of wall as shown in the table below:

Pipe Type	Max Pipe Diam, In	Annular Space, In	Min Forming Mtl Depth	Type of Fill Mtl (3C)	Min Fill Mtl Depth, In	F Rating Hr	T Rating Hr
2A	1	1	1-1/4		1-1/4	2	2
2B	4	1	1-1/4		1-1/4	2	1/4
2B	4	3/4 to 3-1/2	1/4	A	[illegible]	2	1/4
2C	4	3/4 to 3-1/2	1/2	A	1/2	2	0
2C	4	3/4 to 3-1/2	1	A	1	2	1/4
2B	[illegible]	[illegible]	1	B	1-1/4	2	1/4

RECTORSEAL – Metalcaulk 800
RECTORSEAL – Metalcaulk 835+
*Bearing the UL Classification Mark

Reprinted from the 2021 Fire Resistance Directory with permission from Underwriters Laboratories, Inc.

Copyright 2021 Underwriters Laboratories, Inc.

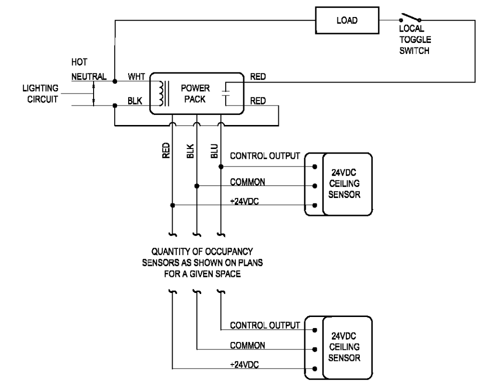

5 LOW VOLTAGE OCCUPANCY SENSOR WIRING DIAGRAM

E4.2 SCALE: N.T.S.

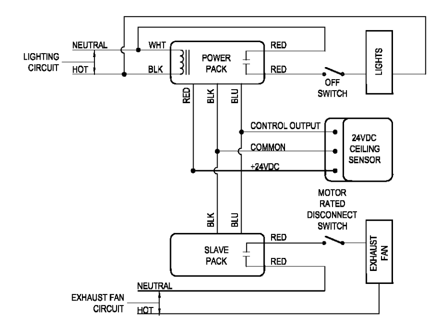

6 LOW VOLTAGE OCCUPANCY SENSOR WIRING DIAGRAM FOR LIGHTS AND EXHAUST FANS

E4.2 SCALE: N.T.S.

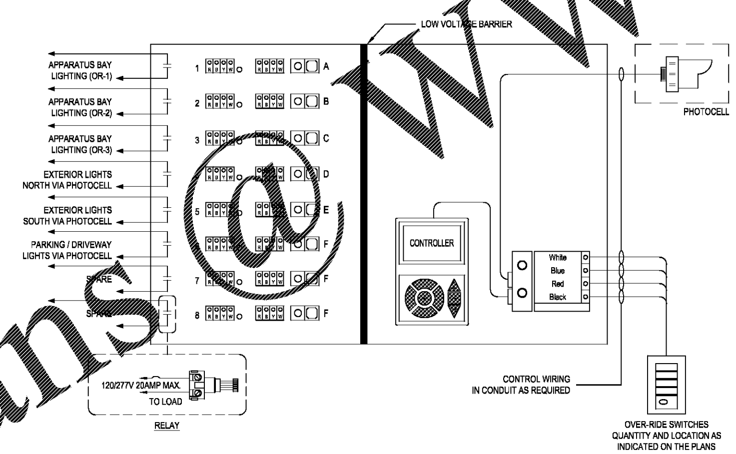

7 LIGHTING CONTROL PANEL "LCP" WIRING DIAGRAM

E4.2 SCALE: NTS

LIGHTING CONTROL PANEL NOTE

RELAY BASED LIGHTING CONTROL PANEL SHALL BE PROVIDED AS INDICATED AND PER SPECIFICATION 260943.23. CONTRACTOR SHALL INCLUDE ALL NECESSARY OVERRIDE SWITCHES, CONTROL WIRING, POWER SUPPLIES, ETC. NECESSARY FOR A COMPLETE AND FUNCTIONAL LIGHTING CONTROL SYSTEM. AT A MINIMUM, THE LIGHTING CONTROL PANEL SHALL INCLUDE THE FOLLOWING, REFER TO SPECIFICATIONS FOR ADDITIONAL REQUIREMENTS:

A. INTEGRAL CONTROLLER WITH 7-DAY SCHEDULING CAPABILITY
B. QUANTITY OF 120V RELAYS AS INDICATED ON THE PLANS AND AS REQUIRED TO PROVIDE CONTROL OF LIGHTING CIRCUITS SHOWN.
C. PUSHBUTTON OVERRIDES FOR EACH RELAY.
D. PHYSICAL BARRIERS TO SEPARATE LOW VOLTAGE CONTROL COMPONENTS IN ACCORDANCE WITH THE NEC.
E. U.L. LISTING FOR INTENDED USE.
F. CONTROL POWER SUPPLY AS REQUIRED TO ACCEPT / UTILIZE 120VAC FOR CONTROL COMPONENTS.
F. CONTRACTOR SHALL COORDINATE SCHEDULE / PROGRAMMING REQUIREMENTS WITH THE OWNER AND PROVIDE COMPLETE COMMISSIONING OF THE SYSTEM AS REQUIRED TO PROVIDE A COMPLETE AND FUNCTIONAL LIGHTING CONTROL SYSTEM. REFER TO LIGHTING FUNCTIONALITY NOTE, THIS SHEET, FOR ADDITIONAL REQUIREMENTS.

THE CONTRACTOR SHALL PROVIDE, NEW, ANY CONFIGURATION TOOL(S), DEVICE(S), ETC. NECESSARY FOR PROGRAMMING, ADJUSTING OR OTHERWISE CHANGING LCP SETTINGS TO THE OWNER AT THE COMPLETION OF THE PROJECT AND PROVIDE A MINIMUM OF FOUR HOURS OF TRAINING ON HOW TO ADJUST THE LCP SCHEDULING AND OVERRIDE BUTTON FUNCTIONALITY UNLESS MORE IS REQUIRED AS DEFINED IN THE CONTRACT SPECIFICATIONS.

ALL CONTROL WIRING SHALL BE INSTALLED IN CONDUIT. REFER TO LIGHTING CONTROL SYSTEM NOTE, THIS SHEET, FOR ADDITIONAL LIGHTING CONTROL REQUIREMENTS.

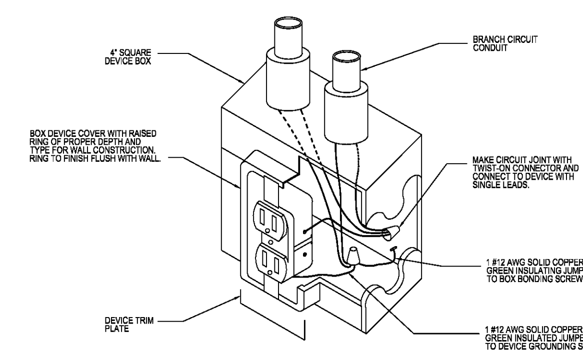

1 RECEPTACLE GROUNDING DETAIL

E4.2 SCALE: N.T.S.

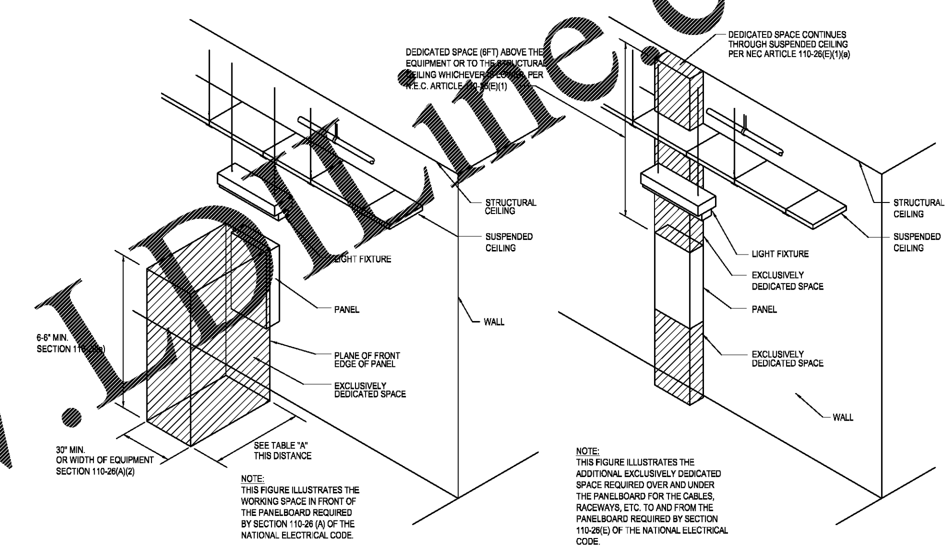

NOTE:
THIS FIGURE ILLUSTRATES THE WORKING SPACE IN FRONT OF THE PANELBOARD REQUIRED BY SECTION 110-26 (A) OF THE NATIONAL ELECTRICAL CODE.

NOTE:
THIS FIGURE ILLUSTRATES THE ADDITIONAL EXCLUSIVELY DEDICATED SPACE REQUIRED OVER AND UNDER THE PANELBOARD FOR THE CABLES, RACEWAYS, ETC. TO AND FROM THE PANELBOARD REQUIRED BY SECTION 110-26(E) OF THE NATIONAL ELECTRICAL CODE.

TABLE 110-26(A)(1)	WORKING CLEARANCES		
VOLTAGE TO GROUND, NOMINAL	MINIMUM CLEAR DISTANCE (FEET) CONDITION: 1	2	3
0-150	3	3	3
151-600	3	3 1/2	4

WHERE THE "CONDITIONS" ARE AS FOLLOWS:
1. EXPOSED LIVE PARTS ON ONE SIDE AND NO LIVE OR GROUNDED PARTS ON THE OTHER SIDE OF THE WORKING SPACE, OR EXPOSED LIVE PARTS ON BOTH SIDES EFFECTIVELY GUARDED BY SUITABLE WOOD OR OTHER INSULATING MATERIALS. INSULATED WIRE OR INSULATE BUSBARS OPERATING AT NOT OVER 300 VOLTS SHALL NOT BE CONSIDERED LIVE PARTS.
2. EXPOSED LIVE PARTS ON ONE SIDE AND GROUNDED PARTS ON THE OTHER SIDE.
3. EXPOSED LIVE PARTS ON BOTH SIDES OF THE WORK SPACE (NOT GUARDED AS PROVIDED IN CONDITION 1) WITH THE OPERATOR BETWEEN.

NOTES:
NO PIPING, DUCTS OR EQUIPMENT FOREIGN TO THE ELECTRICAL EQUIPMENT OR ARCHITECTURAL APPURTENANCES SHALL BE PERMITTED TO BE INSTALLED IN, ENTER OR PASS THROUGH THE DEDICATED SPACES SHOWN ABOVE.

2 DEDICATED SPACE REQUIREMENTS FOR PANELBOARDS

E4.2 SCALE: N.T.S.

1. FOR EACH FIXTURE, PROVIDE TWO STEEL WIRES, ONE WIRE AT EACH OPPOSITE CORNER OF THE FIXTURE. SUPPORT WIRES TO BUILDING STRUCTURE, THEN SCREW FIXTURE TO THE MAIN RUNNERS OF THE LAY-IN CEILING TRACK, AT THE FOUR CORNERS, WITH SHEET METAL SCREWS.
2. FOR FIRE-RATED CEILING, FIXTURE SHALL BE SUPPORTED AS PER THE CEILING DESIGN CRITERIA TO THE BUILDING STRUCTURE.

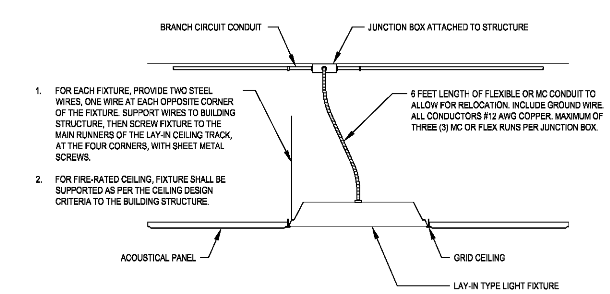

3 LAY-IN FIXURE MOUNTING DETAIL - TYPICAL

E4.2 SCALE: NTS

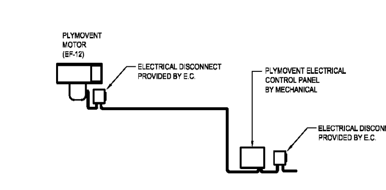

4 VEHICLE EXHAUST WIRING DETAIL

E4.2 SCALE: N.T.S.

ERSOY BRAKE APPLEYARD ARCHITECTS, P.A.
WINSTON-SALEM, NORTH CAROLINA
ARCHITECTURE • PLANNING • INTERIORS

ENGINEERED DESIGNS INC.
North Carolina License #C-1729
1151 SE Cary Parkway, Suite 200 Cary, North Carolina 27518
P 919.851.8481 F 919.851.9703 www.engineereddesigns.com

City of Winston-Salem
FIRE STATION 3

WINSTON-SALEM • NORTH CAROLINA

NORTH CAROLINA PROFESSIONAL SEAL 035026 ENGINEER BRADLEY M WYNNE 3-17-21

THESE DRAWINGS ARE INSTRUMENTS OF SERVICE AND SHALL REMAIN THE PROPERTY OF THE ARCHITECT WHETHER THE PROJECT FOR WHICH THEY ARE MADE IS EXECUTED OR NOT, THEY ARE NOT TO BE USED BY THE OWNER OR ANY OTHER PERSON ON OTHER PROJECTS OR EXTENSIONS TO THIS PROJECT EXCEPT BY AGREEMENT IN WRITING AND WITH APPROPRIATE COMPENSATION TO THE ARCHITECT.

© COPYRIGHT 2021 BY ERSOY BRAKE APPLEYARD ARCHITECTS P.A., ALL RIGHTS RESERVED. EXCEPT AS PERMITTED UNDER THE UNITED STATES COPYRIGHT ACT OF 1976, NO PART OF THIS DOCUMENT MAY BE REPRODUCED OR DISTRIBUTED IN ANY FORM OR BY ANY MEANS WITHOUT THE WRITTEN PERMISSION OF ERSOY BRAKE APPLEYARD ARCHITECTS, P.A.

DRAWN : SG
CHECKED : BW
COMM. : 1904
DATE : 03-17-21
REVISION :

E4.2 OF 1

Order Plans @ www.LDIline.com