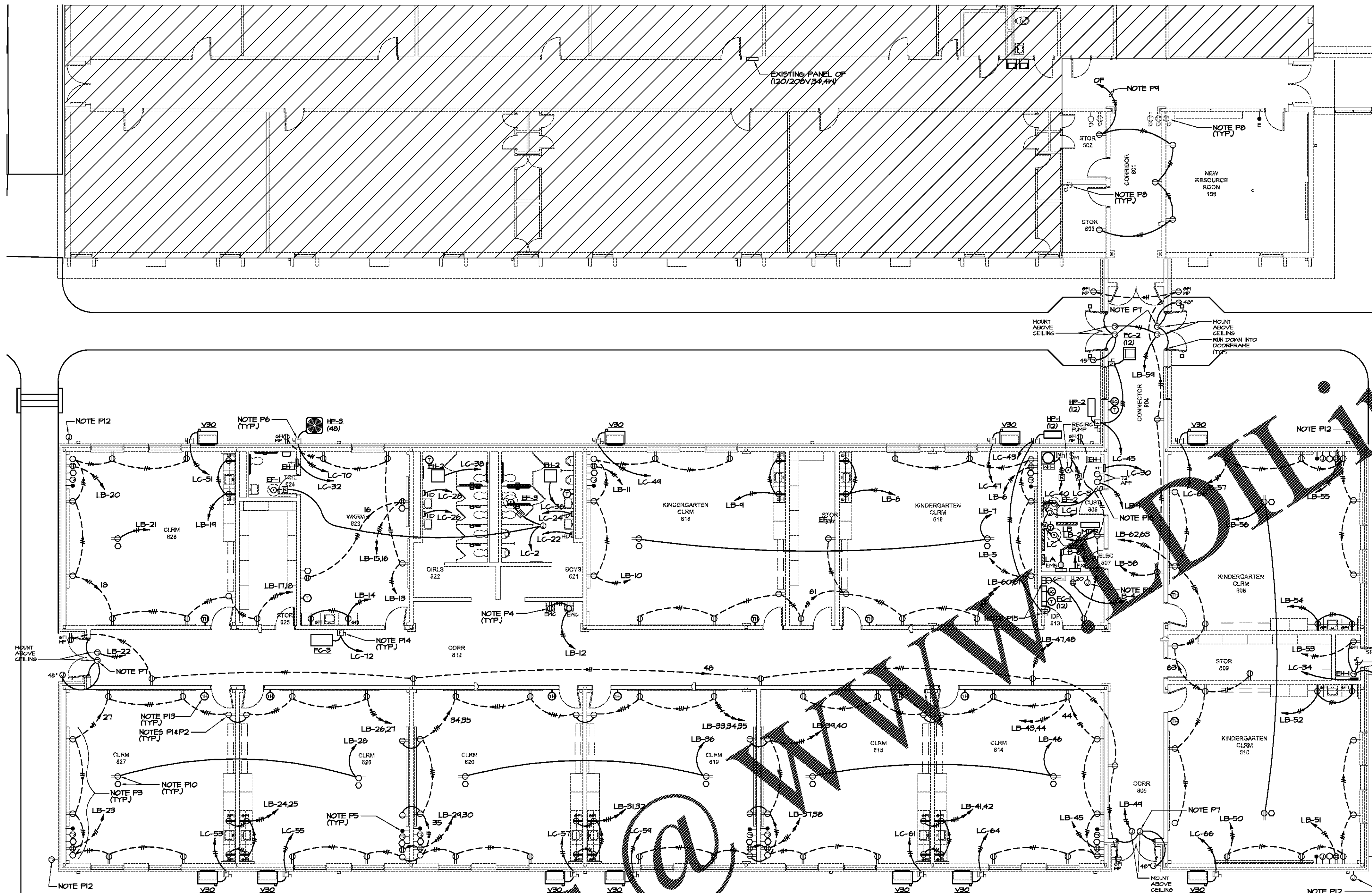

1 PARTIAL FLOOR PLAN - POWER
E2.1 1/8"=1'-0"

REFERENCED POWER NOTES: (APPLIES TO THIS SHEET ONLY)

P1. SEE DETAIL 1/E6.1 FOR TYPICAL RECEPTACLE WIRING.

P2. DO NOT INSTALL ANY OUTLETS BACK TO BACK.

P3. SEE DETAIL 2/E2.1 FOR FRONT OF CLASSROOM DETAIL.

P4. INSTALL RECEPTACLE FOR ELECTRIC WATER COOLERS AT LOCATION AND HEIGHT AS INDICATED IN MANUFACTURERS SHOP DRAWINGS. TO BE CONCEALED WITHIN THE WATER COOLER. COORDINATE WITH PLUMBING.

P5. DEVICES ARE SHOWN ON THIS DRAWING FOR LOCATION. SEE E4.1 FOR CIRCUITING OF INTERCOM SYSTEMS.

P6. SEE MECHANICAL EQUIPMENT LEGEND ON SHEET E6.2 FOR SWITCH AND CONDUCTOR SIZES.

P7. SEE DETAIL 4/E6.1 FOR FUTURE ACCESS CONTROLS BY OWNER.

P8. WHERE EXISTING WALLS ARE REMOVED OR OUTLETS WILL BE COVERED BY NEW CONSTRUCTION, REMOVE EXISTING RECEPTACLES, CONDUCTORS AND EXPOSED CONDUIT BACK TO THE NEXT DEVICE SHOWN TO REMAIN OR PANEL. RUN NEW CONDUIT AND CONDUCTORS ABOVE CEILING AND DOWN IN WALLS TO RECONNECT EXISTING RECEPTACLES LEFT UNSERVED BY REMODELING.

P9. CONNECT TO EXISTING SPARE 20A-1P BREAKER OR INSTALL NEW BREAKER IN PANEL INDICATED.

P10. INSTALL DUPLEX RECEPTACLE AND DATA OUTLET A MAXIMUM OF 18" ABOVE THE CEILING WITH BOXES SUPPORTED FROM STRUCTURE. INSTALL SO THAT RECEPTACLE IS CENTERED WITH BOARD, 11' FROM WALL (OR AS CLOSE TO 11' AS POSSIBLE WHERE OUTLET WOULD INTERFERE WITH LIGHT FIXTURE).

P11. PROVIDE 1#6G. IN ¾"C. FROM MDP TO J-BOX. PROVIDE 12' SLACK AT JUNCTION BOX FOR USE BY OWNER. COORDINATE EXACT LOCATION OF JUNCTION BOX WITH OWNER BEFORE INSTALLATION.

P12. INSTALL J-BOX FLUSH WITH EXTERIOR WALL AT HEIGHT OF 10' ABOVE FINISHED GRADE FOR FUTURE SECURITY CAMERA BY OWNER. RUN 1/2" CONDUIT FROM BOX AND STUB OUT ABOVE CEILING. INSTALL WEATHERPROOF COVER OVER BOX.

P13. COORDINATE EXACT LOCATION OF THERMOSTATS AND SENSORS WITH MECHANICAL.

P14. INSTALL DISCONNECT ON WALL ABOVE CEILING AS CLOSE TO UNIT CONNECTION LOCATION AS POSSIBLE, BUT OUT OF UNIT ACCESS SPACE. SWITCH MUST HAVE CLEARANCES IN FRONT OF SWITCH 30" WIDE X 42" DEEP AS REQUIRED BY NEC SECTION 110-26. COORDINATE WITH OTHER TRADES. SEE MECHANICAL EQUIPMENT LEGEND FOR SWITCH AND CONDUCTOR SIZES.

P15. MOUNT DISCONNECT SWITCH FOR SPLIT SYSTEM ABOVE CEILING. MOUNT RECEPTACLE FOR CONDENSATE PUMP 4" BELOW CEILING.

P16. FURNISH AND INSTALL ENGRAVED COVER PLATE FOR EXHAUST FAN SWITCHES. ENGRAVING SHALL READ 'EXHAUST FAN'.

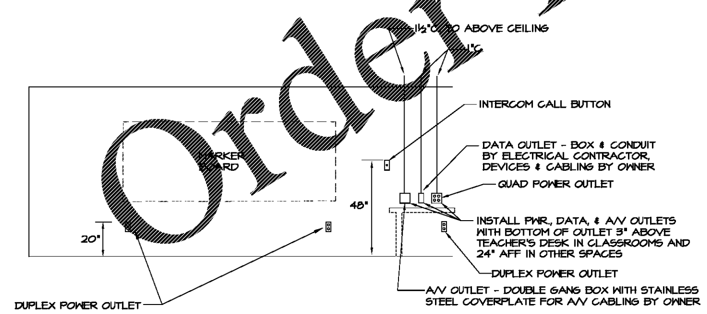

NOTES:
1) ALL CONDUITS AND BACK BOXES TO BE INCLUDED IN THE DIVISION 16 BASE BID.
2) ALL CONDUITS TO BE INSTALLED TO 12" ABOVE FINISHED CEILING ELEVATION AND TURNED OUT OF WALL ON CLASSROOM SIDE. (TYPICAL)
3) MAINTAIN CONSTANT HEIGHT FOR ALL BOXES SHOWN AT THE SAME ELEVATION.

2 CLASSROOM FRONT ELEVATION
E2.1 NOT TO SCALE

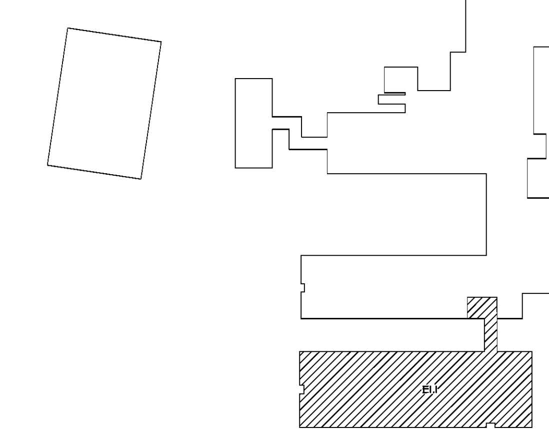

KEY PLAN

DO NOT DUPLICATE WITHOUT PERMISSION

GEORGIA REGISTERED No. 29248 PROFESSIONAL ENGINEER CLINTON KELLEY IV

SPURLOCK & ASSOCIATES, INC.
consulting engineers
2970 Clairmont Rd., Suite 620 | Atlanta, GA 30329
P: 404.633.0245 | F: 404.633.1756
SA JOB NO. 2103

DRAWING ISSUE RECORD		
DATE:	REVISIONS:	NO.
4-6-2021	ISSUE TO BID	

ADDITION TO COLHAM FERRY ELEMENTARY SCHOOL

191 COLHAM FERRY ROAD, WATKINSVILLE, GA 30677
FOR THE
OCONEE COUNTY BOARD OF EDUCATION
OCONEE COUNTY, GA
DOE FACILITY CODE 3050

DATE: DECEMBER 15, 2020 | JOB NO. SHL-D0T-20 | DWG. BY G.T.R. | CK. BY G.L.K.

cunningham forehand matthews moore
cunningham, forehand, matthews & moore, architects, inc. - 2011 manchester street, n.e. - atlanta, georgia 30324 - phone (404) 873-2152

E2.1

Order Plans @ WWW.PDILine.com