# LIGHTING FIXTURE SCHEDULE

| TYPE | MANUFACTURER | CATALOG # | DESCRIPTION | VOLTS | WATTS | MOUNTING | REMARKS |
|---|---|---|---|---|---|---|---|
| A1 | EATON | 24SR-LD2-39-C-UNV-L850-CD1-U | 2 X 4 LED RECESSED FIXTURE | 120 | 31.9 | LAY-IN GRID | ACRYLIC LENS |
| A1E | EATON | 24SR-LD2-39-C-UNV-EL14W-L850-CD1-RH-U | 2 X 4 LED RECESSED EMERGENCY FIXTURE | 120 | 31.9 | LAY-IN GRID | ACRYLIC LENS (NOTE 9) |
| A1F | EATON | 24SR-LD2-39-C-UNV-L850-CD1-U/DF-24W-U | 2 X 4 LED RECESSED FIXTURE WITH DRYWALL FLANGE KIT | 120 | 31.9 | LAY-IN GRID | ACRYLIC LENS (NOTE 8) |
| A1FE | EATON | 24SR-LD2-39-C-UNV-EL14W-L850-CD1-RH-U/DF-24W-U | 2 X 4 LED RECESSED EMERGENCY FIXTURE WITH DRYWALL FLANGE KIT | 120 | 31.9 | HARD CEILING | ACRYLIC LENS (NOTE 8 & 9) |
| 1B | LSI | ELFP22 LED 50 UE | 2 X 2 LED RECESSED FIXTURE | 120 | 36 | RECESSED | ACRYLIC LENS |
| 1BE | LSI | ELFP22 LED 50 UE / ILB-CP12-A | 2 X 2 LED RECESSED FIXTURE W/ EMERGENCY BATTERY PACK | 120 | 36 | RECESSED | ACRYLIC LENS (NOTE 9) |
| D | EATON | RL5602H12950 | 6' LED CAN LIGHT | 120 | 17.6 | RECESSED | |
| E | LITHONIA | STL4 48L EZ1 LP850 | 1 X 4 LED VANITY LIGHT FOR BATHROOMS | 120 | 45.2 | WALL | |
| E2 | LITHONIA | STL2 40L EZ1 LP850 | 1 X 2 LED VANITY LIGHT FOR BATHROOMS | 120 | 39 | WALL | |
| GF | GOLDEN LIGHTING | 3602-L PW-RD | GODFATHER RED ACCENT LIGHT FIXTURE | 120 | 100 | PENDANT | MOUNT TOP OF FIXTURE 3" BELOW CEILING |
| H1 | EATON | 22SR-LD2-29-C-UNV-L850-CD1-U | 2 X 2 LED RECESSED FIXTURE | 120 | 23.4 | WALL | ACRYLIC LENS |
| H1E | EATON | 22SR-LD2-29-C-UNV-EL14W-L850-CD1-RH-U | 2 X 2 LED RECESSED EMERGENCY FIXTURE | 120 | 23.4 | WALL | ACRYLIC LENS (NOTE 9) |
| S4 | EATON | V4T2-LD4-6-UNV-L850-CD1-WL-U | 4' LINEAR VAPORTITE LED STRIP LIGHT | 120 | 57.3 | SURFACE | MOUNT TO BOTTOM OF STRUCTURE |
| T4 | EATON | 4SNLED-LD5-64HL-UNV-L850-CD1-LOV-U | 4' LINEAR LED STRIP LIGHT - HIGH OUTPUT | 120 | 43 | SURFACE | MOUNT TO BOTTOM OF STRUCTURE |
| T4E | EATON | 4SNLED-LD5-64HL-UNV-L850-CD1-EL14W-LOV-U | 4' LINEAR LED STRIP LIGHT, EMERGENCY | 120 | 43 | SURFACE | MOUNT TO BOTTOM OF STRUCTURE (NOTE 9) |
| X1 | LITHONIA | LQM S W 3 R 120/277 EL N M6 | LED EXIT SIGN | 120 | 0.62 | CEILING/WALL | |

1. LIGHT FIXTURES TO BE PROVIDED BY OWNER, INSTALLED AND CONNECTED BY ELECTRICAL CONTRACTOR.
2. PROVIDE ARROWS AND FACES AS INDICATED ON THE DRAWINGS.
3. ELECTRICAL CONTRACTOR SHALL VERIFY ALL FIXTURE LOCATIONS WITH ARCHITECTURAL ELEVATIONS.
4. ELECTRICAL CONTRACTOR SHALL INSTALL ALL CEILING MOUNTED LIGHTING FIXTURES IN LOCATIONS AS INDICATED ON THE ARCHITECTURAL REFLECTED CEILING PLAN.
5. GENERAL CONTRACTOR SHALL PROVIDE FIREPROOFING AROUND RECESSED FIXTURES INSTALLED IN FIRE RATED CEILING PER U.L. REQUIREMENTS, ELECTRICAL CONTRACTOR SHALL COORDINATE.
6. ALL LIGHT FIXTURES SHALL BE SECURED TO THE CEILING FRAMING SYSTEM BY MECHANICAL MEANS (SUCH AS BOLTS, SCREWS, OR RIVETS) OR BY CLIPS IDENTIFIED FOR USE WITH THE TYPE OF CEILING, FRAMING MEMBER, AND LIGHT FIXTURE.
7. EMERGENCY LIGHTS SHALL HUG CEILINGS. IN NON-CEILING STORAGE ROOMS, LOCATE BOTTOM OF FIXTURES AT 12'-0" AFF.
8. PROVIDE DRYWALL FRAME KIT.
9. EMERGENCY FIXTURE WITH EMERGENCY BATTERY.

## M1 — EXISTING PANELBOARD

SERVES: DISTRIBUTION
LOCATION: ELECTRICAL ROOM
FED FROM: MP VIA TRANSFORMER

208Y/120V, 3PH, 4W
1200A M.L.O.
65,000 AIC
SURFACE MOUNT
GROUND BAR
ISOLATED GROUND BAR

| CK | LOAD SERVED | WIRE | BRKR | PL | PHASE A | | PHASE B | | PHASE C | | PL | BRKR | WIRE | LOAD SERVED | CK |
|---|---|---|---|---|---|---|---|---|---|---|---|---|---|---|---|
| 1 | panel k (10) | -- | 200 | 3 | 2.48 | 1.86 | | | | | 3 | 150 | -- | panel a (10) | 2 |
| 3 | -- | | | - | | | 2.48 | 1.86 | | | - | | | -- | 4 |
| 5 | -- | | | - | | | | | 2.48 | 1.86 | - | | | -- | 6 |
| 7 | panel k2 (10) | -- | 300 | 3 | 3.72 | 1.24 | | | | | 3 | 100 | -- | panel b (10) | 8 |
| 9 | -- | | | - | | | 3.72 | 1.24 | | | - | | | -- | 10 |
| 11 | -- | | | - | | | | | 3.72 | 1.24 | - | | | -- | 12 |
| 13 | panel k3 (10) | -- | 300 | 3 | 3.72 | 32.9 | | | | | 3 | 400 | -- | PANEL LP1 (N,14) | 14 |
| 15 | -- | | | - | | | 3.72 | 32.9 | | | - | | | -- | 16 |
| 17 | -- | | | - | | | | | 3.72 | 28.0 | - | | | -- | 18 |
| 19 | PANEL LP2 (N,14) | -- | 400 | 3 | 37.6 | 2.48 | | | | | 3 | 200 | -- | panel f (10) | 20 |
| 21 | -- | | | - | | | 38.3 | 2.48 | | | - | | | -- | 22 |
| 23 | -- | | | - | | | | | 38.8 | 2.48 | - | | | -- | 24 |
| | TOTAL CONNECTED | | | | 86.0 | | 86.7 | | 82.2 | | KVA | | | | |
| | TOTAL CONNECTED | | | | 716.8 | | 722.4 | | 685.4 | | AMPS | | | | |
| | TOTAL LOAD | | | | 254.9 | | KVA | | 707.7 | | AMPS | | | | |
| | PER NEC ARTICLE 220 FEEDER LOAD | | | | 217.9 | | KVA | | 604.9 | | AMPS | | | | |

RELOCATED CIRCUITS:
- FROM M1-14,16,18 TO LP1-79,81,83
- FROM M1-19,21,23 TO LP2-79,81,83

## BUILDING ELECTRICAL SERVICE LOAD SUMMARY

SERVICE DESCRIPTION
480Y/277v, 3PH, 4W

| LOAD DESCRIPTION | CONNECTED KVA | DEMAND FACTOR | DEMAND KVA |
|---|---|---|---|
| EXISTING PEAK UTILITY LOAD @ 0.9 PF * | 211.2 | 125% | [illegible].3 |
| NEW LOAD ADDED | 208.1 | [illegible]00% | 20[illegible] |
| EXISTING LOAD TO BE REMOVED | 0.0 | [illegible]% | 0.[illegible] |
| TOTAL ADJUSTED LOAD | 208.1 | KVA | 301.4 |
| TOTAL ADJUSTED AMPACITY | 250.3 | AMPS | 603.1 |
| SERVICE AMPACITY | | AMPS | 2000.0 |
| SPARE CAPACITY | | AMPS | 1396.9 |

* 12 MO PEAK DEMAND PER UTILITY COMPANY IN KW

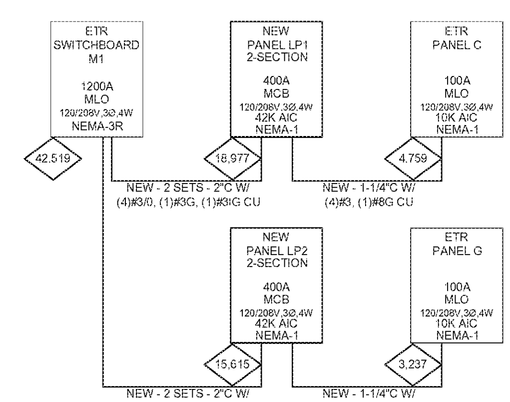


1 PARTIAL ONE-LINE DIAGRAM
SCALE: NTS

## PANELBOARD NOTES ()

(1) TERMINATE GROUND ON ISOLATED GROUND BUS.
(2) INSTALL LOCKING DEVICE (LOCK-OFF FOR MAINTENANCE).
(3) INSTALL LOCKING DEVICE FURNISHED WITH PANELBOARD (LOCK-ON FOR CRITICAL LOAD).
(4) GFI BREAKER FOR PERSONNEL PROTECTION (5 mA).
(5) GFI BREAKER FOR EQUIPMENT PROTECTION (30 mA).
(6) CONDUCTOR SIZE HAS BEEN INCREASED FOR VOLTAGE DROP. SIZE EQUIPMENT GROUNDING CONDUCTOR PROPORTIONALLY PER NEC.
(7) FACTORY WIRED TO LOAD.
(8) THRU CONDUCTOR.
(9) EXISTING CIRCUIT BREAKER TO REMAIN. VERIFY CONDITION OF CIRCUIT BREAKER TO ENSURE THAT IT IS OPERATIONAL AND MEETS ALL U.L. RATINGS.
(10) EXISTING CIRCUIT TO REMAIN.
(11) PROVIDE HANDLE LOCK OFF DEVICE TO LOCK "SPARE" CIRCUIT BREAKER IN THE "OFF" POSITION. IF CIRCUIT BREAKER IS IDENTIFIED AS "EXISTING", FIELD VERIFY CIRCUIT BREAKER INDICATED IS NOT CONNECTED TO ANY LOAD AND UPDATE PANELBOARD CIRCUIT DIRECTORY IDENTIFYING CIRCUIT AS "SPARE".
(12) TRACE EXISTING CIRCUIT, IDENTIFY LOAD AND PROVIDE COMPLETE TYPEWRITTEN PANELBOARD IDENTIFICATION SCHEDULE AND PLACE ON INTERIOR OF PANELBOARD DOOR. IF CIRCUIT IS A "SPARE" THEN REFER TO PANELBOARD NOTE (11).
(13) CONDUCTOR SIZE HAS BEEN INCREASED FOR MORE THAN (3) CURRENT CARRYING CONDUCTORS IN A RACEWAY. E.C. SHALL ADJUST CONDUCTOR SIZES AS NECESSARY.
(14) REFER TO ONE-LINE DIAGRAM FOR WIRE SIZES
(15) RELOCATE CIRCUIT TO NEW PANELBOARD. REFER TO ONE-LINE DIAGRAM.
(N) NEW

ALL SWITCHBOARDS AND PANELBOARDS SHALL HAVE A COMMERCIALLY PRODUCED PERMANENT LABEL APPLIED TO WARN OF POTENTIAL ARC FLASH HAZARDS. IN ACCORDANCE WITH NEC 110.16 AND NFPA 70E. LABELING MAY BE COMPLETED BY EQUIPMENT MANUFACTURER, EQUIPMENT VENDOR/SUPPLIER, OR THE CONTRACTOR. THE CONTRACTOR SHALL VERIFY THAT ALL SWITCHBOARDS AND PANELBOARDS ARE PROPERLY LABELED IN THE FIELD.

EXISTING CIRCUITRY IS BASED ON ORIGINAL BUILDING PLANS. IF EXISTING CIRCUITS TO REMAIN ARE NOT AS SHOWN ON THE PANELBOARD SCHEDULES, ARRANGE NEW CIRCUITS BASED UPON PRESENT LOCATION OF EXISTING CIRCUITS TO REMAIN SHOWN IN LOWERCASE.

EC SHALL MATCH TYPE AND AIC RATINGS OF EXISTING CIRCUIT BREAKERS.

ELECTRICAL SERVICE AND METERING ARE EXISTING TO REMAIN.

COORDINATE THE EXTENT OF ALL REQUIRED ELECTRICAL DEMOLITION WITH CONSTRUCTION MANAGER

EACH SUBCONTRACTOR IS RESPONSIBLE FOR HAVING A THOROUGH KNOWLEDGE OF ALL DRAWINGS AND SPECIFICATIONS IN THEIR RELATED FIELD. THE FAILURE TO ACQUAINT HIMSELF WITH THIS KNOWLEDGE DOES NOT RELIEVE THE RESPONSIBILITY OF PERFORMING HIS WORK PROPERLY. NO ADDITIONAL COMPENSATION SHALL BE ALLOWED BECAUSE OF CONDITIONS THAT OCCUR DUE TO FAILURE TO FAMILIARIZE WORKERS WITH THIS KNOWLEDGE.

EXISTING CONDITIONS WERE TAKEN FROM ORIGINAL DRAWINGS AND MAY NOT REFLECT EXACT "AS-BUILT" CONDITIONS. CONTRACTOR SHALL FIELD VERIFY ALL EXISTING CONDITIONS PRIOR TO SUBMITTING FINAL BIDS. CONTRACTOR SHALL CAREFULLY COORDINATE NEW WORK AND DEMOLITION WITH ALL OTHER DISCIPLINES AND EXISTING CONDITIONS.

HFA ARCHITECTS ENGINEERS INTERIORS
HARRISON FRENCH & ASSOCIATES, LTD
1705 S. Walton Blvd., Suite 3
Bentonville, Arkansas 72712
t 479.273.7780
f 888.520.9685
www.hfa-ae.com

STIPULATION FOR REUSE
THIS DRAWING WAS PREPARED FOR USE ON A SPECIFIC SITE AT GARY, IN CONTEMPORANEOUSLY WITH ITS ISSUE DATE ON 02/05/21, AND IT IS NOT SUITABLE FOR USE ON A DIFFERENT PROJECT SITE OR AT A LATER TIME. USE OF THIS DRAWING FOR REFERENCE OR EXAMPLE ON ANOTHER PROJECT REQUIRES THE SERVICES OF PROPERLY LICENSED ARCHITECTS AND ENGINEERS. REPRODUCTION OF THIS DRAWING FOR REUSE ON ANOTHER PROJECT IS NOT AUTHORIZED AND MAY BE CONTRARY TO THE LAW.

REMODEL
STORE NUMBER: 417
3150 GRANT ST
GARY, IN 46408
JOB NUMBER: 03-18-10417

ISSUE BLOCK

| CHECKED BY: | CAR |
|---|---|
| DRAWN BY: | DFF |
| DOCUMENT DATE: | 02/05/21 |

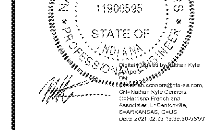


PANELBOARDS & SCHEDULES

SHEET: E6

Feb05,2021-2:14pm - User:drey.fickle
L:\03\03-18-10417 Loves - Gary, IN 417\CONDOCS\MEP\Elec\425 E6 PANELBOARDS & SCHEDULES.dwg

Order Plans @ WWW.LDILine.com