ACCESSIBILITY REQUIREMENTS

TYPICAL ACCESSIBLE WATER CLOSET

GC TO PROVIDE 2x WOOD BLOCKING AT ALL GRAB BARS AND RESTROOM ACCESSORIES

GRAB BAR NOTE: WHERE AN ADMINISTRATIVE AUTHORITY REQUIRES FLUSH CONTROLS FOR FLUSH VALVES TO BE LOCATED IN A POSITION THAT CONFLICTS WITH THE LOCATION OF THE REAR GRAB BAR, THEN THE REAR GRAB BAR SHALL BE PERMITTED TO BE SPLIT OR SHIFTED TO THE OPEN SIDE OF THE TOILET AREA

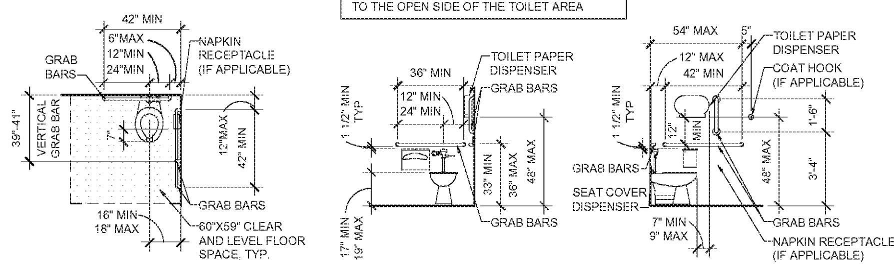

ACCESSORY MOUNTING

NOTE. ENSURE CHANGING STATIONS HAS KNEE SPACE OF 27" AFF MIN TO BOTTOM OF TABLE WHEN IN DOWN POSITION

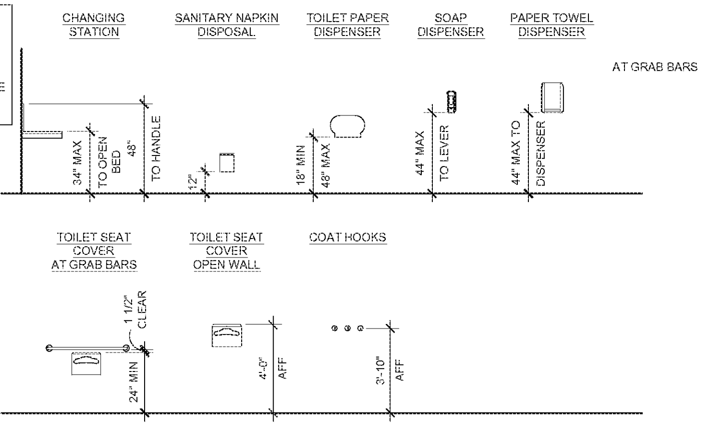

LAVATORY MOUNTING

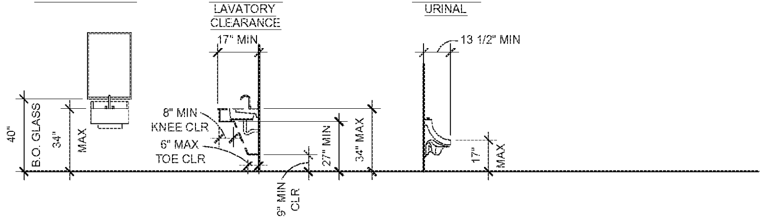

TYPICAL ACCESSIBLE SHOWERS

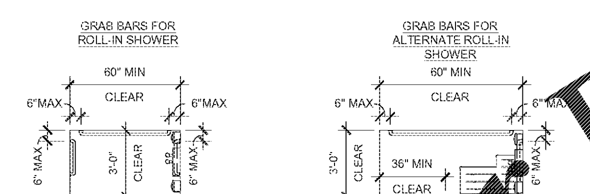

TYPICAL ACCESSIBLE CLEARANCES

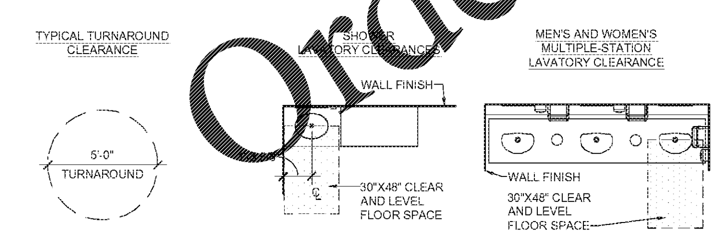

ACCESSIBLE TACTILE SIGNS & PLACEMENT

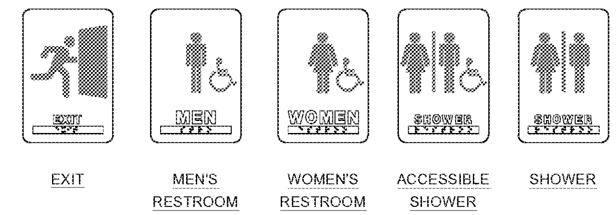

GENERAL NOTES:

1. SIGN TO BE ADHESIVE ACRYLIC WITH RAISED CHARACTERS WITH A MINIMUM HEIGHT OF 5/8" AND MAXIMUM HEIGHT OF 2" ACCOMPANIED BY GRADE 2 BRAILLE.
2. PICTOGRAMS SHALL HAVE THE EQUIVALENT VERBAL DESCRIPTION LISTED DIRECTLY BELOW.
3. CHARACTERS, SYMBOLS AND THEIR BACKGROUNDS SHALL HAVE A NON-GLARE FINISH WITH CHARACTERS AND SYMBOLS THAT CONTRAST WITH THE BACKGROUND.
4. SIGN TO BE MOUNTED ALONG THE DOOR ON LATCH SIDE, SEE DIAGRAM RIGHT, WHEN SIGN OCCURS AT DOUBLE DOORS, MOUNT TO THE RIGHT OF THE RIGHT HAND DOOR. WHEN WALL SPACE IS NOT AVAILABLE IN THE ABOVE LOCATIONS, SIGN TO BE INSTALLED ON THE NEAREST ADJACENT WALL.
5. PROVIDE 18"x18" CLEAR FLOOR AREA CENTER OF SIGN, BEYOND THE ARC OF ANY DOOR SWING.
6. SIGNS TO BE BLACK BACKGROUND WITH WHITE LETTERS, TYP.
7. ALL DOOR SIGNS ARE PROVIDED BY THE OWNER AND INSTALLED BY THE CONTRACTOR. DOOR SIGNAGE SHALL COMPLY WITH ADA INCLUDING CHARACTER HEIGHT AND PROPORTION, BRAILED CHARACTERS, FINISH AND CONTRAST, INTERNATIONAL SYMBOL OF ACCESSIBILITY AND MOUNTING HEIGHTS

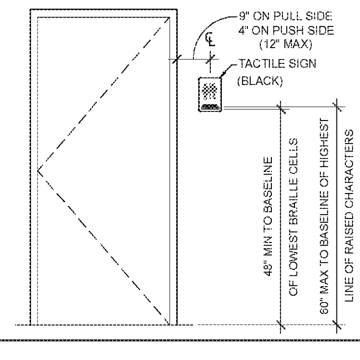

DOOR APPROACH CLEAR FLOOR SPACE REQUIREMENTS

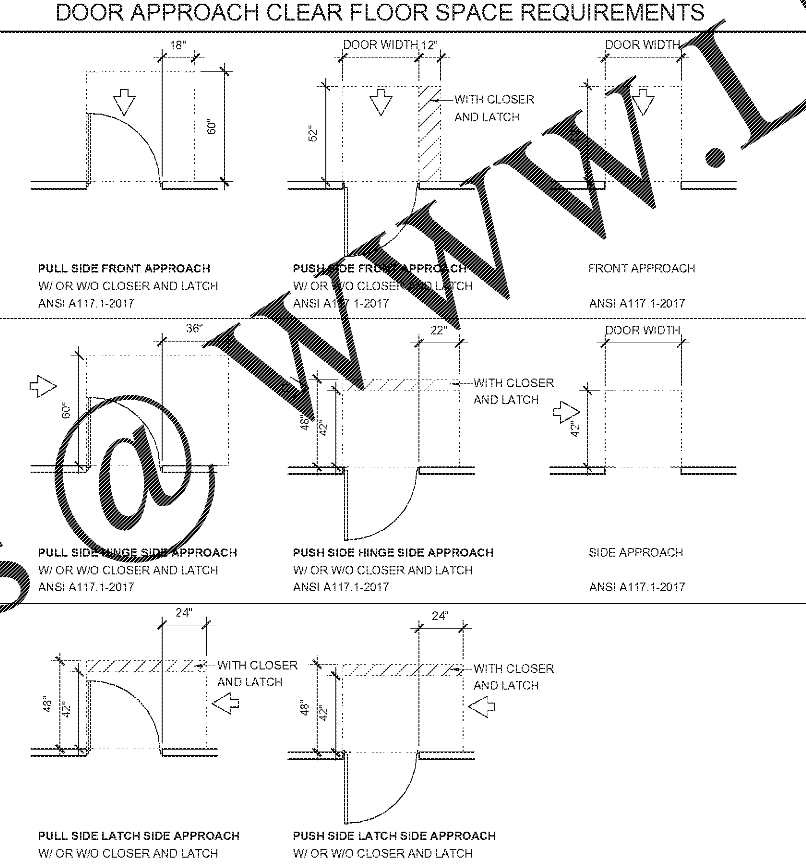

CLEARANCES SHOWN IN COMPLIANCE WITH ANSI A117.1 2017 404 2.3 3 AND 404.2 2.4

GENERAL NOTES

1. THE CONTRACTOR SHALL PRIOR TO COMMENCING WORK, FIELD VERIFY ALL EXISTING PROJECT CONDITIONS, INCLUDING DIMENSIONS, UTILITY LOCATION, AND UTILITY SIZES.
2. FIELD CONFIRMATION OF DISCREPANCIES SHALL BE RECORDED ON A REPRODUCIBLE DOCUMENT AND IMMEDIATELY TRANSMITTED TO THE OWNER AND THE ARCHITECT FOR PROJECT RECORD, COORDINATION, AND NECESSARY RESOLUTION PRIOR TO CONTINUING WITH WORK.
3. THE CONTRACTOR SHALL VERIFY, AND BE RESPONSIBLE FOR, ALL WORK AND MATERIALS - INCLUDING THOSE FURNISHED BY SUBCONTRACTORS.
4. WRITTEN DIMENSIONS TAKE PRECEDENCE OVER SCALED SIZES; DO NOT SCALE DRAWINGS TO DETERMINE ANY LOCATIONS. THE ARCHITECT SHALL BE NOTIFIED OF ANY DISCREPANCIES PRIOR TO CONTINUING WITH WORK.
5. DIMENSIONS ON PLANS ARE TO FACE OF STUD, CENTERLINE OF OPENINGS, OR TO GRIDLINES UNLESS NOTED OTHERWISE.
6. WORK SHALL CONFORM TO THE LATEST ADOPTED EDITIONS OF ALL APPLICABLE BUILDING CODES. REFER TO THE PROJECT DATA, THE AMERICANS WITH DISABILITIES ACT, AND ALL OTHER LOCAL GOVERNING CODES AND ORDINANCES.
7. THE CONTRACTOR SHALL NOTIFY BOTH THE OWNER AND ARCHITECT OF ERRORS, OMISSIONS, OR INCONSISTENCIES FOUND IN THE CONSTRUCTION DOCUMENTS. ERRORS NOT REPORTED PRIOR TO START OF CONSTRUCTION SHALL BE CORRECTED AT THE CONTRACTOR'S EXPENSE IN A MANNER APPROVED BY THE OWNER AND ARCHITECT.
8. THE GENERAL BUILDING PERMITS SHALL BE PAID FOR BY THE OWNER AND SECURED BY THE GENERAL CONTRACTOR. ALL OTHER REQUIRED PERMITS SHALL BE SECURED AND PAID FOR BY THE CONTRACTOR OR SUBCONTRACTOR DIRECTLY RESPONSIBLE.
9. ALL REQUIRED CITY AND COUNTY LICENSES SHALL BE ACQUIRED AND PAID FOR BY THE INDIVIDUAL TRADES.
10. ALL CONTRACTORS SHALL HAVE VALID CERTIFICATIONS OF WORKMAN'S COMPENSATION ON FILE WITH APPROPRIATE AGENCIES.
11. THE CONTRACTOR SHALL BE RESPONSIBLE FOR LOCATING ALL UTILITIES WHETHER SHOWN HEREIN OR NOT, AND TO PROTECT THEM FROM DAMAGE. THE CONTRACTOR SHALL BEAR ALL EXPENSE FOR THE REPAIR OR REPLACEMENT OF UTILITIES AND ALL OTHER PROPERTY DAMAGED BY OPERATIONS IN CONJUNCTION WITH EXECUTION OF WORK.
12. THE CONTRACTOR SHALL PROVIDE A TEMPORARY FIELD OFFICE, TELEPHONES, TEMPORARY SECURITY FENCING, WATER, POWER AND TOILET FACILITIES. COORDINATE LOCATIONS WITH ALL APPROPRIATE AGENCIES. FIELD OFFICE SHALL ALSO CONTAIN CURRENT COPIES OF ALL GOVERNING BUILDING CODES AND AMENDMENTS.
13. CONSTRUCTION DOCUMENTS APPROVED BY THE AHJ SHALL BE KEPT IN A PLAN BOX AND SHALL NOT BE USED BY WORKERS. ALL CONSTRUCTION SETS SHALL REFLECT THE SAME INFORMATION. THE CONTRACTOR SHALL ALSO MAINTAIN, IN GOOD CONDITION, ONE (1) COMPLETE SET OF PLANS WITH ALL ADDENDA, REVISIONS, AND CHANGE ORDERS ON THE PREMISES AT ALL TIMES. THESE ARE TO BE UNDER THE CARE OF THE JOB SUPERINTENDENT.
14. THE CONTRACTOR SHALL BE RESPONSIBLE FOR SITE SECURITY WHILE THE JOB IS IN PROGRESS UNTIL WORK IS COMPLETE.
15. THE CONTRACTOR SHALL MAINTAIN THE JOB SITE IN A CLEAN AND ORDERLY MANNER. ALL DEBRIS SHALL BE REMOVED FROM PREMISES AND ALL AREAS SHALL BE LEFT IN BROOM-CLEAN CONDITION AT ALL TIMES. THE CONTRACTOR SHALL LOCATE AND MAINTAIN A TRASH BIN AT THE SITE, WHICH SHALL BE OF ADEQUATE DIMENSION TO KEEP THE SITE CLEAN AT ALL TIMES. DUST RESULTING FROM SALVAGE, DEMOLITION, REMOVAL WORK, AND CONSTRUCTION SHALL BE CONTROLLED TO PREVENT THE IMPOSITION OF A NUISANCE OR HAZARDOUS CONDITION TO THE ADJOINING PORTIONS OF THE PROJECT. THE USE OF WATER WILL NOT BE PERMITTED WHEN SUCH USE WOULD RESULT IN HAZARDOUS OR OTHERWISE OBJECTIONABLE CONDITION.
16. THE CONTRACTOR SHALL PROVIDE PEDESTRIAN PROTECTION IN ACCORDANCE WITH ALL APPLICABLE BUILDING CODES.
17. THE CONTRACTOR SHALL TAKE ALL NECESSARY PRECAUTIONS TO ENSURE THE SAFETY OF THE OCCUPANTS AND WORKERS AT ALL TIMES.
18. THE CONTRACTOR SHALL PROVIDE REQUIRED PROTECTION INCLUDING, BUT NOT LIMITED TO, SHORING, BRACING, AND ALL OTHER SUPPORTS (INCLUDING ENGINEERING OF SYSTEMS) NECESSARY TO MAINTAIN OVERALL STRUCTURAL INTEGRITY OF THE BUILDING.
19. ALL DEMOLITION AND CUTTING SHALL BE PERFORMED IN A MANNER AND BY METHODS WHICH ENSURE AGAINST DAMAGE TO EXISTING WORK.
20. NO STRUCTURAL MEMBERS SHALL BE CUT TO ACCEPT PIPES, VENTS, DUCTS, OR OTHER PENETRATIONS, EXCEPT AS DETAILED OR SPECIFIED HEREIN.
21. GYPSUM BOARD AND SUSPENDED CEILING SYSTEMS SHALL CONFORM TO ALL LOCAL GOVERNING BUILDING CODES, ORDINANCES, AND SEISMIC DESIGN REQUIREMENTS.
22. ALL GLASS AND GLAZING SHALL COMPLY WITH ALL APPLICABLE BUILDING CODES AS WELL AS THE U.S. CONSUMER PRODUCT SAFETY COMMISSION SAFETY STANDARDS FOR ARCHITECTURAL GLAZING MATERIAL (47 FR. 13516 TITLE NO. 16, CHAPTER 11, PART 1201).
23. THE CONTRACTOR SHALL ASSIST THE OWNER IN OBTAINING FINAL APPROVAL OF THE LOCAL HEALTH DEPARTMENT AND FOR TEMPORARY AND FINAL CERTIFICATIONS OF OCCUPANCY.
24. THE CONTRACTOR SHALL BE RESPONSIBLE FOR, AND SHALL REMEDY , REPAIR, OR REPLACE ANY FAULTY, IMPROPER OR INFERIOR WORKMANSHIP OR MATERIALS AND ANY RELATED DAMAGE CAUSE BY THESE WHICH SHALL APPEAR WITH ONE (1) YEAR AFTER THE COMPLETION AND ACCEPTANCE OF THE WORK UNDER THIS CONTRACT. REFER TO SPECIFICATIONS FOR WARRANTY REQUIREMENTS IN EXCESS OF ONE (1) YEAR.
25. IN ADDITION TO EQUIPMENT WARRANTIES, THE CONTRACTOR SHALL FURNISH THE OWNER A WRITTEN GUARANTEE AGAINST LATENT AND PATENT DEFECTS IN MATERIAL AND WORKMANSHIP FOR ONE (1) YEAR. GUARANTEE SHALL INCLUDE REPAIR, DAMAGE TO, OR REPLACEMENT OF, ANY PART OF EQUIPMENT PROVIDED.
26. PIPES, CONDUITS OR DUCTS EXCEEDING ONE THIRD OF THE SLAB OR MEMBER THICKNESS SHALL NOT BE PLACED IN STRUCTURAL CONCRETE UNLESS SPECIFICALLY DETAILED. REFER TO THE MECHANICAL, ELECTRICAL, PLUMBING, AND STRUCTURAL DRAWINGS FOR LOCATION OF SLEEVES AND OTHER ACCESSORIES.
27. ALL ELECTRICAL, MECHANICAL, AND PLUMBING WORK SHALL CONFORM TO THE REQUIREMENTS OF ALL THE LEGALLY CONSTITUTED AUTHORITIES HAVING JURISDICTION.
28. THE CONTRACTOR SHALL PROVIDE BACKING FOR SUPPORT OF ALL WALL, CEILING, AND PARTITION MOUNTED ITEMS INCLUDING BUT NOT LIMITED TO TABLE BRACKETS, LIGHT FIXTURES, ARTIFACTS, SHELVING, EQUIPMENT, AND TELEVISIONS. COORDINATE LOCATIONS AND REQUIREMENTS WITH THE PLUMBING, MECHANICAL, ELECTRICAL, AND FOOD SERVICE DRAWINGS, AS WELL AS INTERIOR DESIGN CONSULTANT AND THE OWNER.
29. THE CONTRACTOR SHALL VERIFY LOCATIONS OF FOOD SERVICE EQUIPMENT AND COORDINATE LOCATIONS OF FLOOR SINKS, FLOOR DRAINS, TROUGH DRAINS, SLAB DEPRESSIONS, RAISED CURBS, ELECTRICAL STUB-OUTS, PLUMBING STUB-OUTS, AND ALL OTHER WORK UNDER THE SCOPE OF RESPONSIBILITIES RELATED TO THIS EQUIPMENT. REFER TO THE FOOD SERVICE DRAWINGS FOR ADDITIONAL INFORMATION.
30. EXTERIOR OPENINGS SHALL COMPLY WITH SECURITY REQUIREMENTS AS OUTLINED IN ALL LOCAL BUILDING CODES AND ORDINANCES.
31. THE CONTRACTOR SHALL MAINTAIN CURRENT, ACCURATE, AS-BUILT "RECORD" DRAWINGS DURING CONSTRUCTION. RECORD DRAWINGS SHALL BE SUBMITTED TO THE OWNER WITHIN TWO WEEKS AFTER CERTIFICATE OF OCCUPANCY IS ACQUIRED AND UPON COMPLETION OF FINAL PUNCH LIST, BUT PRIOR TO REQUEST FOR FINAL PAYMENT.
32. THE CONTRACTOR SHALL NOT ALLOW ANY PERSON TO DESCEND INTO ANY TRENCH OR HOLE, OR CREATE ANY SUCH EXCAVATIONS, WITHOUT THE PRIOR APPROVAL OF BUILDING DEPARTMENT AS WELL AS OTHER AGENCIES HAVING JURISDICTION.
33. THE CONTRACTOR SHALL VERIFY FIRE EXTINGUISHER REQUIREMENTS AND LOCATIONS WITH THE FIRE MARSHAL AND OWNER'S REPRESENTATIVE PRIOR TO INSTALLATION.
34. THE CONTRACTOR SHALL SEAL ALL GAPS, HOLES AND CRACKS IN THE BUILDING CONSTRUCTION AS REQUIRED TO CONTROL INSECT INFILTRATION.
35. THE CONTRACTOR SHALL INSTRUCT SUBCONTRACTORS TO CAREFULLY REVIEW THE CONSTRUCTION DOCUMENTS IN THEIR ENTIRETY. INFORMATION REGARDING COMPLETE WORK OF SPECIFIC TRADES AND SUB-TRADES IS DISPERSED THROUGHOUT THE DRAWINGS AND SPECIFICATIONS AND CANNOT BE DETERMINED BY REFERENCE TO ANYTHING OTHER THAN COMPLETE SETS OF DOCUMENTS.
36. NOTHING WITHIN THE CONSTRUCTION DOCUMENTS SHALL BE INTERPRETED AS RELIEVING THE CONTRACTOR OF THE SOLE RESPONSIBILITY FOR MEANS AND METHODS OF CONSTRUCTION, AND FOR MAINTAINING SAFETY AT THE JOB SITE.
37. THE CONTRACTOR SHALL COORDINATE WITH THE AHJ, THE FIRE MARSHAL, AND THE LIFE SAFETY INSPECTOR, AS APPLICABLE FOR THEIR FINAL DETERMINATION OF FIRE LANE LOCATIONS, AND BEFORE FINAL INSPECTION IS MADE. SEE THE SITE PLANS FOR REQUIREMENTS.
38. COORDINATE INSTALLATION OF RESTROOM AND SHOWER ACCESSORIES WITH OWNERS REP.
39. ALL WALL TILE VERTICAL JOINTS LOCATED AT INSIDE CORNERS TO BE CAULKED. MATCH TILE COLOR.
40. THE CONTRACTOR SHALL PROVIDE 2x WOOD BLOCKING AT ALL GRAB BARS & RESTROOM ACCESSORIES. REF: INTERIOR ELEVATIONS.
41. THE CONTRACTOR SHALL INSTALL RESTROOM AND SHOWER ACCESSORIES ON CERAMIC TILE, USE A "DEWALT DIAMOND DRILL BIT", MODEL DW5574 OR EQUAL WITH WATER, CORE TYPE BIT.
42. MILLWORK, EQUIPMENT, FIXTURES, AND SHELVING ARE PROVIDED BY OWNER, INSTALLED BY GENERAL CONTRACTOR.
43. VERIFY ALL FINISHES AND COLORS INDICATED ON PLANS. COORDINATE WITH THE OWNER. FIELD VERIFY.
44. THE CONTRACTOR SHALL PROVIDE AIR CONDITIONED PORTA-JOHN TRAILER THAT IS CONNECTED TO EXISTING SANITARY SEWER CLEAN-OUT. THE GENERAL CONTRACTOR IS RESPONSIBLE FOR MONTHLY BILL. MINIMUM OF 2 STALLS AND 2 URINALS WITH HAND SINKS FOR THE MEN'S. MINIMUM OF 2 STALLS WITH HAND SINKS FOR THE WOMEN'S. THESE ARE ONLY REQUIRED IF ANY CONSTRUCTION IS BEING COMPLETED IN THE MEN'S AND WOMEN'S RESTROOMS.
45. REFERENCE A1.7 FOR ROOM AND INTERIOR FINISH SCHEDULES, A6 FOR DOOR SCHEDULE, A1.6 FOR ALL EQUIPMENT, ACCESSORY AND SIGNAGE SCHEDULES.
46. REFERENCE G2 FOR PARTITION TYPES.

ACCESSIBILITY NOTES

1. ACCESSIBLE TABLES SHALL HAVE A MINIMUM OF 27" CLEAR KNEE SPACE AFF AND HAVE A CLEAR AREA OF AT LEAST 19" DEEP. TOP OF TABLE SHALL BE 34" AFF.
2. COAT HOOKS IN TOILET STALLS SHALL BE MOUNTED CENTERED ON THE BACKSIDE OF DOORS AT 38" AFF IN ACCESSIBLE STALLS AND 60" IN STANDARD STALLS.
3. FLUSH VALVES ON THE TOILETS SHALL ALWAYS BE LOCATED ON THE WIDE SIDE OF TOILET STALL. UTILIZE 5 LBS. OF FORCE OR LESS TO OPERATE.
4. ALL PANIC HARDWARE SHALL BE MOUNTED NO HIGHER THAN 46" AFF.
5. ALL THRESHOLDS, FLOOR LEVEL CHANGES, AND FLOOR TRANSITIONS SHALL NOT EXCEED 1/2" IN HEIGHT AND SHALL BE BEVELED WITH A SLOPE NO GREATER THAN 1:2.
6. ALL LIGHT SWITCHES, VOLUMES CONTROLS, AND THERMOSTATS IN PUBLIC AREAS SHALL BE MOUNTED NO HIGHER THAN 48" AFF UNO

HFA ARCHITECTS ENGINEERS INTERIORS
HARRISON FRENCH & ASSOCIATES, LTD
1705 S. Walton Blvd., Suite 3
Bentonville, Arkansas 72712
t 479.273.7780
f 888.520.9685
www.hfa-ae.com

STIPULATION FOR REUSE
THIS DRAWING WAS PREPARED FOR USE ON A SPECIFIC SITE AT GARY, IN CONTEMPORANEOUSLY WITH ITS ISSUE DATE ON 02/05/21, AND IT IS NOT SUITABLE FOR USE ON A DIFFERENT PROJECT SITE OR AT A LATER TIME. USE OF THIS DRAWING FOR REFERENCE OR EXAMPLE ON ANOTHER PROJECT REQUIRES THE SERVICES OF PROPERLY LICENSED ARCHITECTS AND ENGINEERS. REPRODUCTION OF THIS DRAWING FOR REUSE ON ANOTHER PROJECT IS NOT AUTHORIZED AND MAY BE CONTRARY TO THE LAW

REMODEL

STORE NUMBER: 417
3150 GRANT ST
GARY, IN 46408

JOB NUMBER: 03-18-10417

ISSUE BLOCK

CHECKED BY:		RAF
DRAWN BY:		JTH
DOCUMENT DATE:		02/05/21

2021.02.09 07:34:10-06'00'

GENERAL NOTES, ACCESSIBILITY REQUIREMENTS & DOOR APPROACHES

SHEET: G1

Feb05,2021-10:29am - User:joseph.haney
L:\03\03-18-10417 Loves - Gary, IN 417\CONDOCS\Architectural\ 101 G1 GENERAL NOTES, ACCESSIBILITY REQUIREMENTS & DOOR APPROACHES.dwg

Order Plans @ WWW.LDLine.com