1 | 2 | 3 | 4 | 5 | 6

E

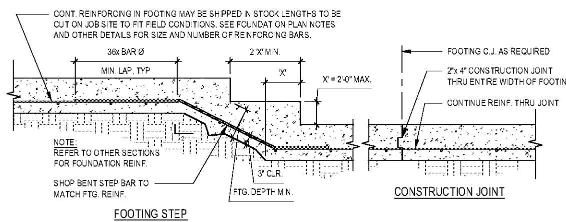

1 / S201 TYP. FOOTING STEP & FOOTING CONSTRUCTION JOINT
1/2" = 1'-0"

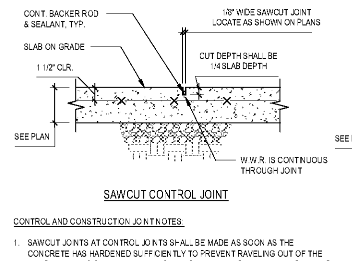

CONTROL AND CONSTRUCTION JOINT NOTES:

1. SAWCUT JOINTS AT CONTROL JOINTS SHALL BE MADE AS SOON AS THE CONCRETE HAS HARDENED SUFFICIENTLY TO PREVENT RAVELING OUT OF THE AGGREGATE AND DAMAGE TO THE EDGES, BUT NO LATER THAN 24 HOURS AFTER FINISHING OF THE SLAB SURFACE HAS BEEN COMPLETED.
2. SAWCUT JOINTS SHALL BE AT ALL CONSTRUCTION JOINTS. JOINTS SHALL BE SAWCUT WHEN CONTROL JOINTS ARE SAWCUT.

2 / S201 SLAB ON GRADE JOINT DETAILS
1 1/2" = 1'-0"

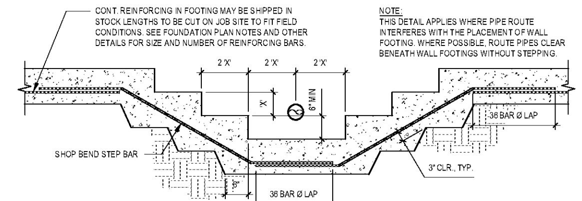

3 / S201 STEPPED FOOTING @ UNDERGROUND UTILITIES
1/2" = 1'-0"

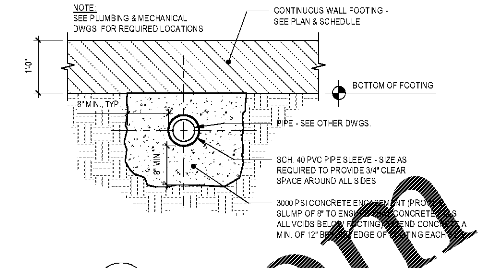

4 / S201 PIPE SLEEVE BENEATH FOOTING
3/4" = 1'-0"

D

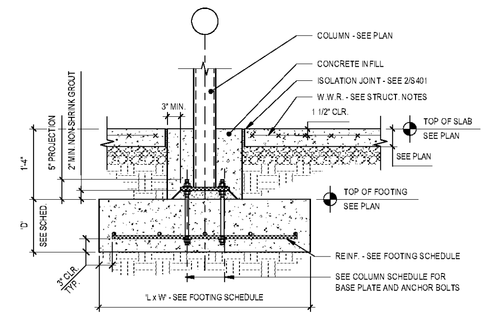

5 / S201 INT. HSS COLUMN FOOTING
3/4" = 1'-0"

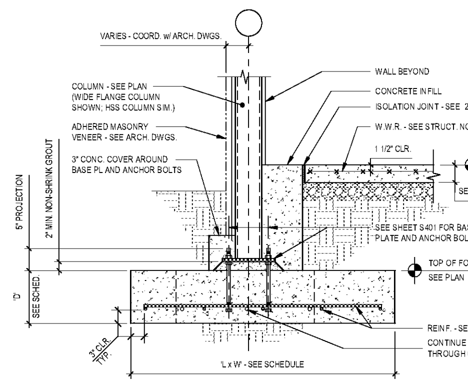

6 / S201 COLUMN w/ FOOTING IN EXTERIOR WALL
3/4" = 1'-0"

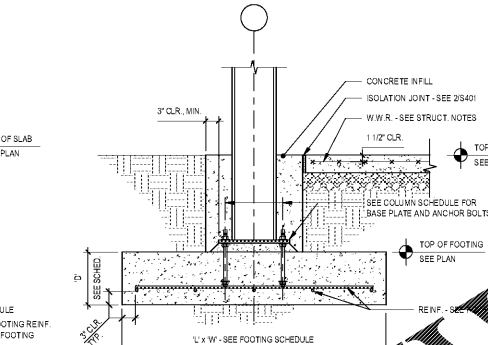

7 / S201 WIDE FLANGE COLUMN FOOTING
3/4" = 1'-0"

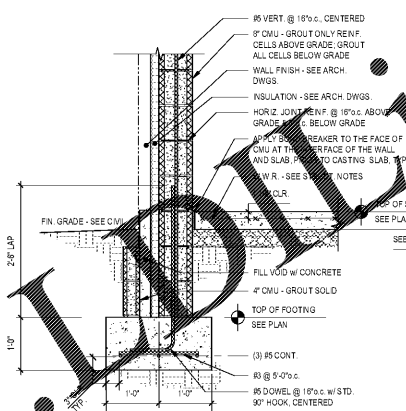

8 / S201 EXT. 8" CMU WALL FOOTING w/ VENEER
3/4" = 1'-0"

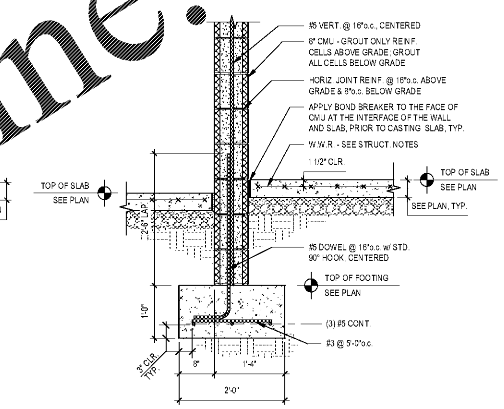

9 / S201 INT. 8" CMU WALL FOOTING
3/4" = 1'-0"

C

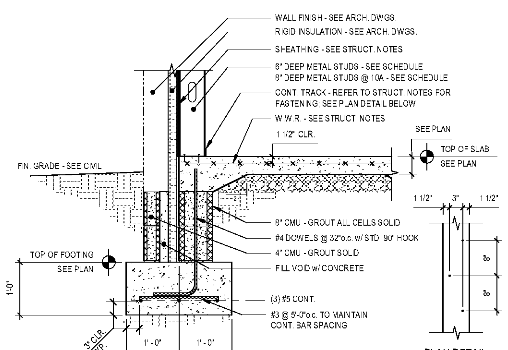

10 / S201 EXT. WALL w/ METAL STUDS & VENEER
3/4" = 1'-0"

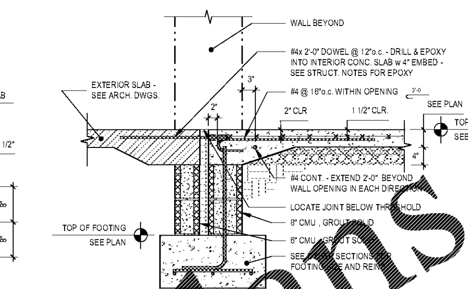

11 / S201 TYP. EXT. DOOR SECTION
3/4" = 1'-0"

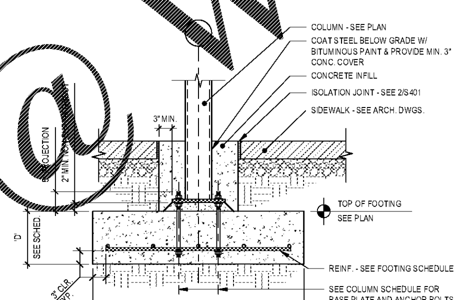

12 / S201 PAVILION COLUMN FOOTING
3/4" = 1'-0"

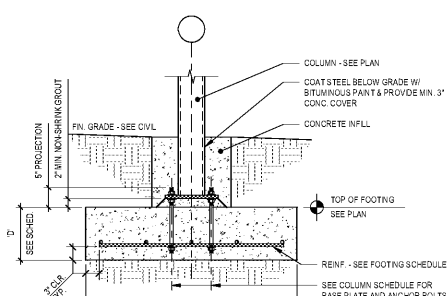

13 / S201 SUNSCREEN COLUMN FOOTING
3/4" = 1'-0"

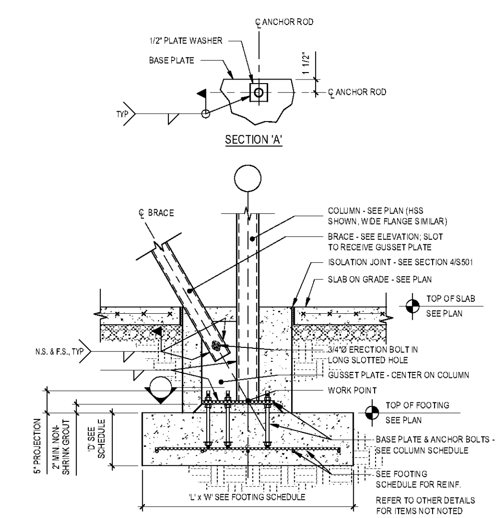

14 / S201 BRACE FRAME BASE DETAIL
3/4" = 1'-0"

B

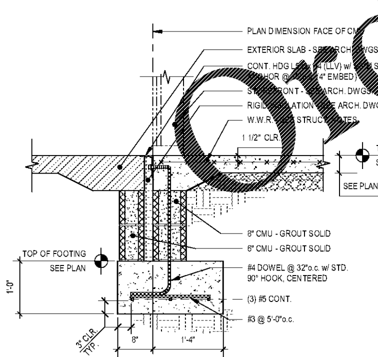

15 / S201 EXT. WINDOW WALL
3/4" = 1'-0"

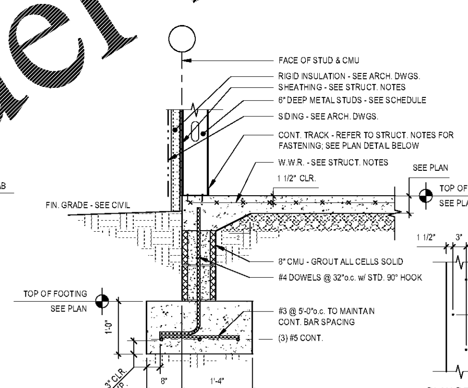

16 / S201 EXT. WALL w/ METAL STUDS
3/4" = 1'-0"

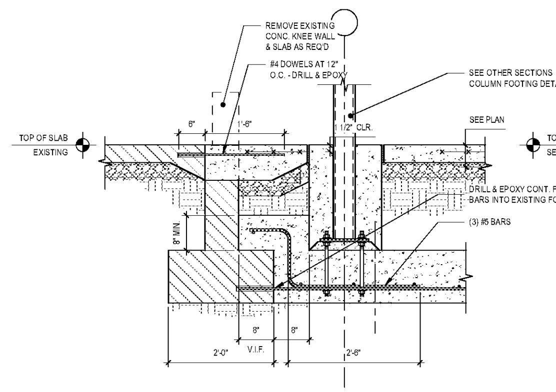

17 / S201 NEW FOOTING PERP. TO EXISTING FOUNDATION
3/4" = 1'-0"

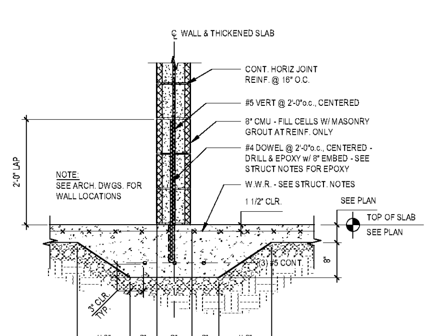

18 / S201 INTERIOR THICKENED SLAB DETAIL
3/4" = 1'-0"

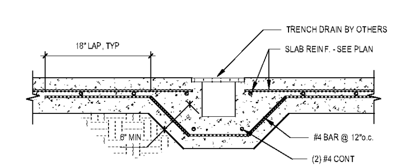

19 / S201 TRENCH DRAIN
3/4" = 1'-0"

A

Order Plans @ WWW.LDULine.com

City of Asheville/ Parks & Recreation

DR. WESLEY GRANT SR. CENTER EXPANSION

285 LIVINGSTON STREET
ASHEVILLE, NC 28801

DESIGNER

CLARKNEXSEN

301 COLLEGE STREET, SUITE 300
ASHEVILLE, NORTH CAROLINA 28801
828-232-0608

CLARK NEXSEN LICENSE NUMBER: C-1028

KLOESEL
Engineering, PA
License C-1207
8 Magnolia Avenue, Suite 100
Asheville, North Carolina 28801
(828) 255-0780

PROFESSIONAL SEAL

NORTH CAROLINA PROFESSIONAL ENGINEER SEAL 032890 CHRISTOPHER J. O'NEAL 3/12/2021

SUBMITTAL
03.12.21
CONSTRUCTION DOCUMENTS

REVISIONS

KEY PLAN

SHEET
FOUNDATION SECTIONS & DETAILS

S201

DESIGN: KEPA
DRAWN: REM
REVIEW: KEPA

CN 7904-A

3/12/2021 10:36:53 AM
2:\2018\2018570 - Southside Facilities\7904_SOUTHSIDE FACILITIES_S19.rvt