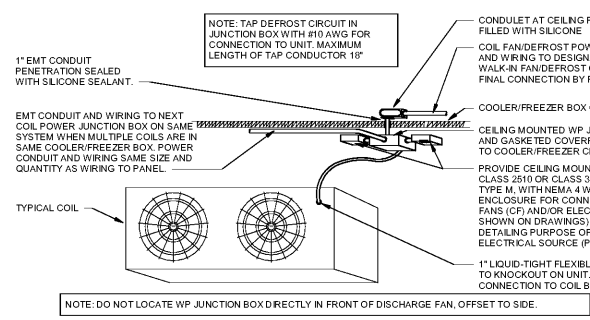

6 EVAPORATOR COIL WIRING
NTS

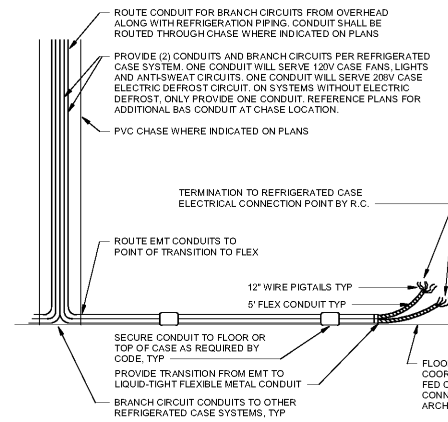

5 CASE CONNECTION WIRING
NTS

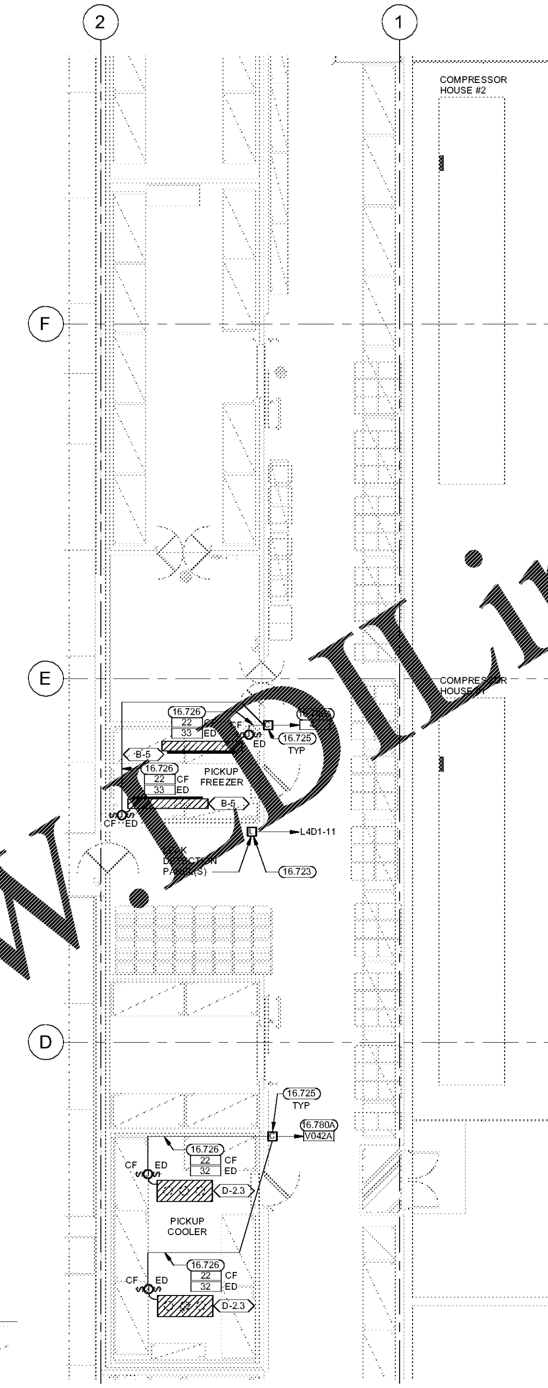

3 FRONT REFRIGERATION ELECTRICAL PLAN
1/8" = 1'-0"

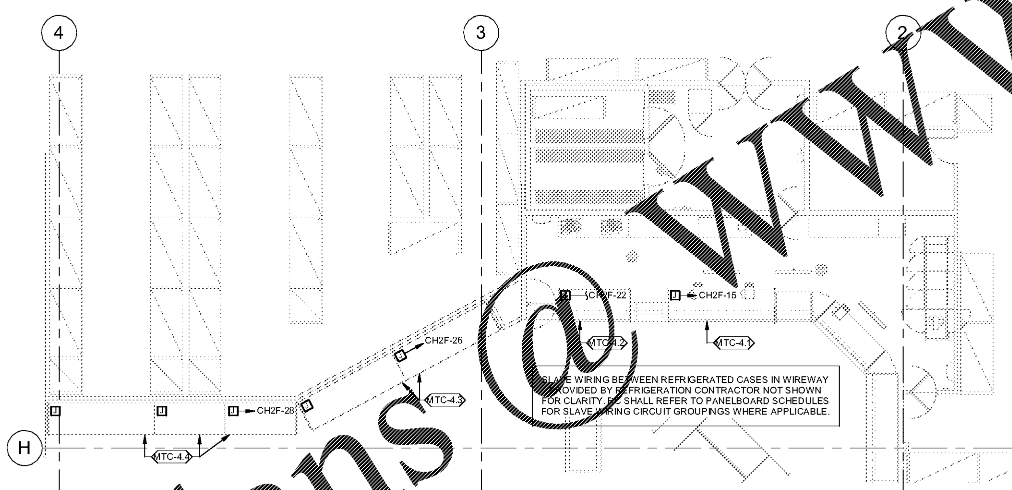

4 REAR REFRIGERATION ELECTRICAL PLAN
1/8" = 1'-0"

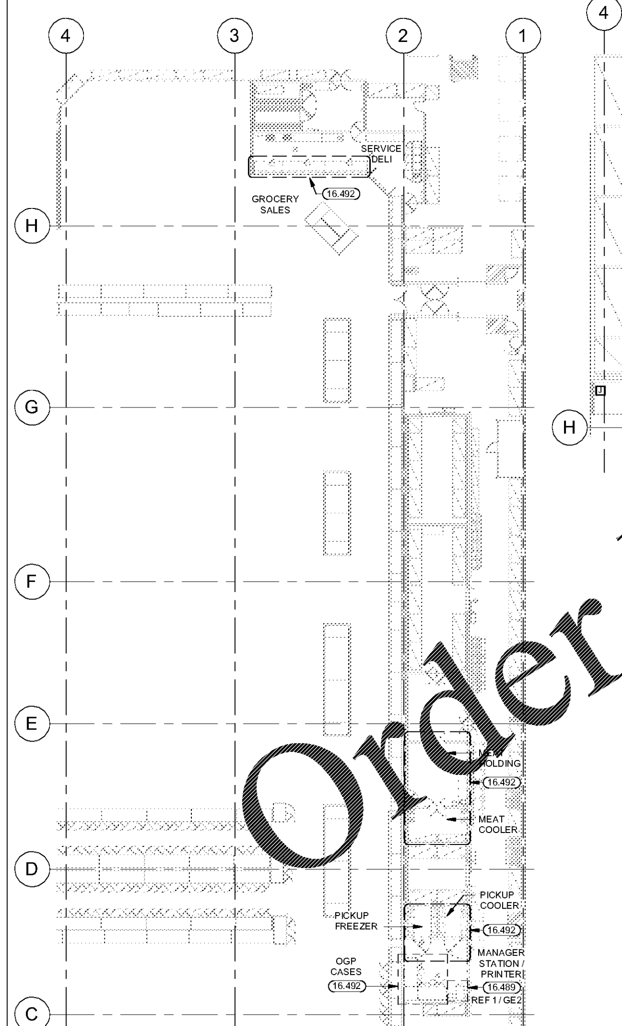

2 REFRIGERATION ELECTRICAL DEMO PLAN
1" = 20'-0"

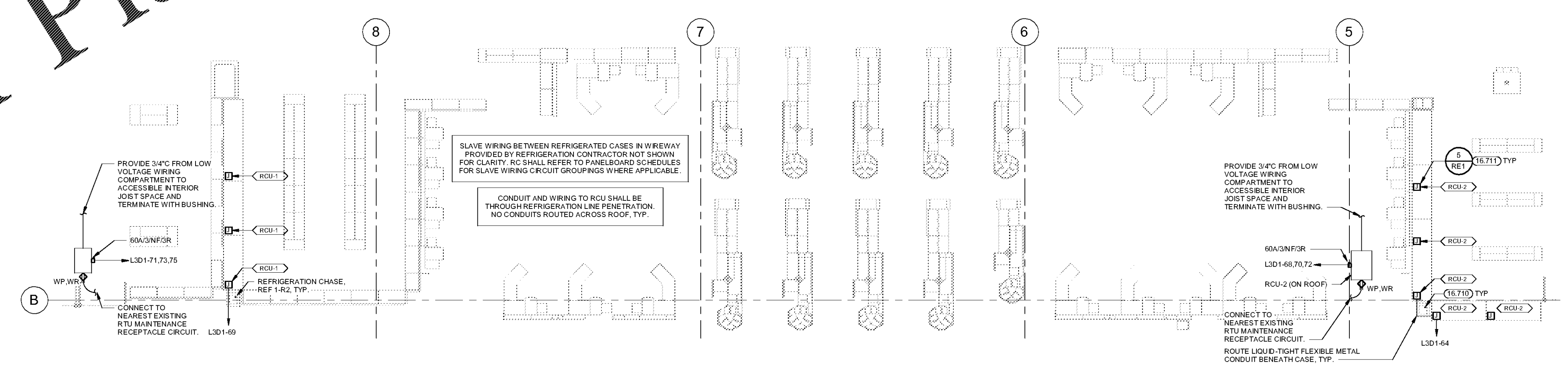

1 FRONT END REFRIGERATION ELECTRICAL PLAN
1/8" = 1'-0"

KEYNOTES

16.489 RELOCATE, EXTEND, AND RECONNECT CIRCUITRY AND ELECTRICAL DEVICES FOR RELOCATED AND/OR NEW EQUIPMENT. VERIFY CONDITION OF BRANCH CIRCUITRY, CONDUIT AND WIRE TO ENSURE THEY MEET ALL U.L. RATINGS AND REPLACE AS REQUIRED. VERIFY FINAL LOCATION OF RELOCATED/NEW EQUIPMENT WITH WALMART CONSTRUCTION MANAGER PRIOR TO ROUGH-IN.

16.492 E.C. SHALL COORDINATE WITH GENERAL CONTRACTOR AND ARCHITECTURAL DEMOLITION PLANS THE EXTENT OF ELECTRICAL DEMOLITION. REMOVE UNUSED DEVICES, BOXES, CONDUITS, AND WIRING BACK TO ORIGINATING JUNCTION BOXES OR PANELBOARDS. REFERENCE POWER PLANS FOR CIRCUITRY TO BE REUSED. DEMOLITION SHALL NOT AFFECT ACTIVE CIRCUITS. IF CIRCUIT IS DEMOLISHED ALL THE WAY TO PANELBOARD, REMOVE CIRCUIT BREAKER AND REPLACE WITH FILLER PLATE. UPDATE TYPEWRITTEN CIRCUIT DIRECTORY IDENTIFYING CIRCUIT AS "SPACE". COORDINATE EXACT REQUIREMENTS WITH EXISTING CONDITIONS PRIOR TO BID.

16.710 BUILDING AUTOMATION CONDUITS: PROVIDE 1" (UNLESS NOTED OTHERWISE) CONDUIT (WITH PULL WIRE) ROUTED FROM 6" ABOVE BOTTOM OF BAR JOIST IN SALES FLOOR ACCESSIBLE CEILING SPACE THROUGH PVC CHASE.

16.711 POINT OF TRANSITION FROM EMT TO FLEX. PROVIDE CONDUIT AND BRANCH CIRCUITS FOR REFRIGERATED CASE FANS, LIGHTS, ANTI-SWEAT HEATERS, AND ELECTRICAL DEFROST (IF REQUIRED). TERMINATION TO REFRIGERATED CASE ELECTRICAL CONNECTION POINT BY R.C. REFER TO CASE CONNECTION WIRING DETAIL.

16.723 REFRIGERATION BUILDING AUTOMATION SYSTEM CONTROLLER AND/OR LEAK DETECTION PANEL FURNISHED AND INSTALLED BY OTHERS. PROVIDE POWER AS INDICATED INCLUDING HANDLE LOCK-ON/LOCK-OFF DEVICE AT BREAKER(S). FINAL TERMINATIONS AT BAS/LEAK DETECTION PANEL BY R.C.

16.725 ROUTE COIL FAN AND/OR ELECTRIC DEFROST CIRCUITS VIA CONTROL DEVICES PROVIDED WITH WALK-IN BAS CONTROLLER. FINAL TERMINATIONS AT ENCLOSURE BY R.C.

16.726 ROUTE COIL FAN (CF) AND/OR ELECTRIC DEFROST (ED) CIRCUITS FROM THE BAS CONTROLLER TO WP CEILING MOUNTED JUNCTION BOXES.

16.780A E.C. SHALL REMOVE EXISTING CONTACTOR IN RACK CABINET AND CONNECT CIRCUITRY DIRECTLY TO CIRCUIT OVERCURRENT PROTECTION DEVICE. REFRIGERATION SYSTEM EVAPORATOR FAN/DEFROST CIRCUITS SHALL BE CONTROLLED BY FACTORY INSTALLED CONTROLS IN NEW CASES OR BY FIELD INSTALLED CONTROLS AT WALK-INS. IF REQUIRED, E.C. SHALL INSTALL NEW VENDOR FURNISHED OVERCURRENT PROTECTION DEVICE FOR REFRIGERATION SYSTEM EVAPORATOR FAN/DEFROST CIRCUIT. PROVIDE A NEW NEMA 1 ENCLOSURE FOR FAN/DEFROST CIRCUIT OVERCURRENT PROTECTION DEVICE, IF NEEDED. MOUNT NEMA 1 ENCLOSURE AS CLOSE AS POSSIBLE TO EXISTING RACK CABINET. REFER TO REFRIGERATION LEGEND(S).

GENERAL REFRIGERATION ELECTRICAL NOTES

08.28.20

1. COORDINATE ALL WORK WITH REFRIGERATION CONTRACTOR (R.C.) PRIOR TO INSTALLATION.
2. REFRIGERATED CASES: E.C. SHALL PROVIDE CONDUIT AND WIRE FOR REFRIGERATED CASE FANS, LIGHTS AND ANTI-SWEAT HEATERS, AND (IF APPLICABLE) ELECTRICAL DEFROST. PROVIDE ADEQUATE CONDUCTOR LENGTH TO ALLOW TERMINATION. NEATLY BUNDLE CIRCUITS AND CLEARLY TAG AND LABEL EACH CIRCUIT WITH BRANCH CIRCUIT DESIGNATION AND REFRIGERATION SYSTEM NUMBER FOR FINAL TERMINATION AT CASE BY R.C. REF CASE CONNECTION WIRING DETAIL.
3. IF NEW CASES ARE PROVIDED WITH A FACTORY INSTALLED TERMINAL STRIP AND JUMPERS FOR CONNECTION TO A SINGLE CIRCUIT FOR 120V CASE LOADS, RC SHALL REMOVE FACTORY INSTALLED JUMPERS AS REQUIRED TO UTILIZE EXISTING SEPARATE 120V FAN/LIGHT/ANTI-SWEAT CIRCUITS AS INDICATED ON PLANS AND/OR PANELBOARD SCHEDULES. ANY EXISTING ANTI-SWEAT CONTROL (SWEATMISER) SHALL BE BY-PASSED. CASES UTILIZING ELECTRICAL DEFROST WILL BE PROVIDED WITH SEPARATE 208V TERMINATIONS AT THE TERMINAL STRIP FOR CONNECTION TO THE 208V ELECTRIC DEFROST CIRCUIT. RC SHALL MAKE FINAL TERMINATIONS OF 120V AND 208V POWER CIRCUIT(S) AT CASE TERMINAL STRIP. REFER TO CASE CONNECTION SCHEMATIC ON REFRIGERATION SHEETS.
4. WALK-IN UNITS: PROVIDE CONDUIT AND WIRE FOR EVAPORATOR COIL FANS (CF) AND (IF APPLICABLE) ELECTRIC DEFROST (ED). PROVIDE ADEQUATE CONDUCTOR LENGTH TO ALLOW TERMINATION. NEATLY BUNDLE CIRCUITS AND CLEARLY TAG AND LABEL EACH CIRCUIT WITH BRANCH CIRCUIT DESIGNATION AND REFRIGERATION SYSTEM NUMBER FOR FINAL TERMINATION AT COIL BY R.C. REF EVAPORATOR COIL WIRING DETAIL.
5. ROUTE REFRIGERATED CASE AND WALK-IN UNIT COIL FAN, LIGHTS, ANTI-SWEAT AND DEFROST BRANCH CIRCUITS TO WIREWAYS PROVIDED AT REFRIGERATION EQUIPMENT AND/OR PANELBOARDS AS REQUIRED.
6. REFRIGERATED CASE WIRING COMPARTMENT REPRESENTED ON DRAWING BY JUNCTION BOX.
7. KEEP PENETRATIONS THROUGH WALK-IN UNITS TO A MINIMUM. ROUTE ALL CONDUITS SERVING FREEZERS AND COOLERS ON INSIDE OF BOX.
8. ALL CONDUITS INSTALLED ON TOP OF WALK-IN UNITS SHALL BE A MINIMUM OF 6" FROM ANY EDGE TO ALLOW SPACE FOR EDGE PROTECTION NETTING. DO NOT ROUTE CONDUITS ABOVE THE CEILING GRID ACCESS UNLESS CONDUITS ARE INSTALLED IN JOIST SPACE, REF ARCH.
9. UNDERSLAB CIRCUITS SHALL NOT BE ROUTED UNDER WALK-IN FREEZERS AND SHALL BE ROUTED ABOVE REFRIGERANT LINES WHERE THEY CROSS.
10. CIRCUITS FOR REFRIGERATED CASES SERVED BY UNDERSLAB REFRIGERATION PIPING ARE TO BE ROUTED UNDERSLAB AND EXTENDED TO THE FIRST CASE IN EACH SYSTEM. WIRING AND CONDUIT FOR SLAVE WIRING BETWEEN CASES SHALL BE PROVIDED BY R.C. REFER TO UNDERSLAB CASE CONNECTION WIRING DETAIL.
11. ALL UNDERSLAB CONDUITS SHALL BE 3/4" MIN.
12. CIRCUITS FOR REFRIGERATED CASES SERVED BY OVERHEAD REFRIGERATION PIPING ARE TO BE ROUTED DOWN FROM STRUCTURE AT THE SAME LOCATION AS THE REFRIGERATION PIPING AND EXTENDED TO THE FIRST CASE IN EACH SYSTEM. WIRE AND CONDUIT FOR SLAVE WIRING BETWEEN CASES SHALL BE PROVIDED BY THE R.C. REFER TO OVERHEAD CASE CONNECTION WIRING DETAIL.
13. ON GROUPS OF THREE OR MORE REFRIGERATED CASES WITH ELECTRIC DEFROST, R.C. SHALL CONNECT CASES TO CREATE A THREE-PHASE HEATER CIRCUIT. HEATER LOADS SHALL BE BALANCED BETWEEN PHASES AS EVENLY AS POSSIBLE. REF CASE DEFROST WIRING DETAIL.
14. PROVIDE A SEPARATE NEUTRAL FOR EACH NEW BRANCH CIRCUIT SERVING REFRIGERATED CASES OR WALK-IN UNITS.
15. PROVIDE CIRCUIT BREAKER LOCKING DEVICE (LOCK-OFF FOR MAINTENANCE) ON NEW AND/OR EXISTING CIRCUIT BREAKERS SERVING REFRIGERATED CASES.
16. REFERENCE ARCHITECTURAL DEMOLITION PLANS FOR FULL EXTENT OF DEMOLITION WORK REQUIRED.

FEEDER SCHEDULE

ALL CONDUIT AND CONDUCTOR SIZES ARE BASED ON EMT WITH 40% FILL, 75°C RATED TERMINATIONS AND TYPE THHN/THWN-2 INSULATION. FOR NON-EMT CONDUIT OR TERMINATIONS OR INSULATION TYPES RATED LESS THAN 75°C, MODIFY SIZES ACCORDING TO NEC.

XXX	FEEDER OR GROUND SIZE
22	(2)#12, (1)#12 G, 1/2" C
32	(2)#10, (1)#10 G, 1/2" C
33	(3)#10, (1)#10 G, 1/2" C
43	(3)#8, (1)#10 G, 3/4" C
V042A	(2)#6, (1)#8 G, 3/4" C

EXISTING CONDITIONS WERE TAKEN FROM ORIGINAL DRAWINGS AND MAY NOT REFLECT EXACT "AS-BUILT" CONDITIONS. CONTRACTOR SHALL FIELD VERIFY ALL EXISTING CONDITIONS PRIOR TO SUBMITTING FINAL BIDS. CONTRACTOR SHALL CAREFULLY COORDINATE NEW WORK AND DEMOLITION WITH ALL OTHER DISCIPLINES AND EXISTING CONDITIONS.

EACH SUBCONTRACTOR IS RESPONSIBLE FOR HAVING A THOROUGH KNOWLEDGE OF ALL DRAWINGS AND SPECIFICATIONS IN THEIR RELATED FIELD. THE FAILURE TO ACQUAINT THEMSELF WITH THIS KNOWLEDGE DOES NOT RELIEVE THE RESPONSIBILITY OF PERFORMING THE WORK PROPERLY. NO ADDITIONAL COMPENSATION SHALL BE ALLOWED BECAUSE OF CONDITIONS THAT OCCUR DUE TO FAILURE TO FAMILIARIZE WORKERS WITH THIS KNOWLEDGE.

STIPULATION FOR REUSE
THIS DRAWING WAS PREPARED FOR USE ON A SPECIFIC SITE AT: PRATTVILLE, AL CONTEMPORANEOUSLY WITH ITS ISSUE DATE ON 03/31/21 AND IT IS NOT SUITABLE FOR USE ON A DIFFERENT PROJECT SITE OR AT A LATER TIME. USE OF THIS DRAWING FOR REFERENCE OR EXAMPLE ON ANOTHER PROJECT REQUIRES THE SERVICES OF PROPERLY LICENSED ARCHITECTS AND ENGINEERS. REPRODUCTION OF THIS DRAWING FOR REUSE ON ANOTHER PROJECT IS NOT AUTHORIZED AND MAY BE CONTRARY TO THE LAW.

CONSULTANTS
HENDERSON ENGINEERS
8345 LENEXA DRIVE, SUITE 300
LENEXA, KS 66214
TEL 913.742.5000 FAX 913.742.5001
WWW.HENDERSONENGINEERS.COM
2180300483
AL CORPORATE NO. CA-2185-E
EXPIRES 1/31/2022

Walmart
PRATTVILLE, AL
1903 COBBS FORD ROAD
STORE NO: 00483-249
2021 MAJOR PROJECT
JOB NUMBER: 2180300483 | PROTO: 188

ISSUE BLOCK

CHECKED BY:	MM
DRAWN BY:	SBH/DP
PROTO CYCLE:	01/29/21
DOCUMENT DATE:	03/31/21

STATE OF ALABAMA LICENSED No. 39436-E PROFESSIONAL ENGINEER WILLIAM RAY WINSTON
03/30/2021

REFRIGERATION ELECTRICAL PLAN

SHEET: RE1

WILLIAM R. WINSTON

Order Plans @ WWW.DILine.com