Ariane Tattershall Digitally signed by Ariane Tattershall Date: 2021.03.31 12:49:30-05'00'

Order Plans @ WWW.LDILine.com

PARTITION TYPES

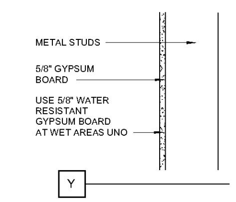

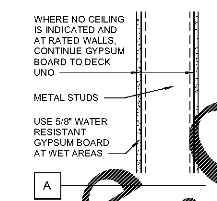

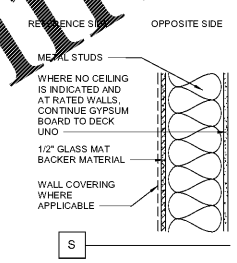

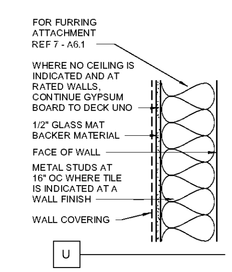

SHEET NOTES

1. STUDS CONTINUE TO DECK UNO. REF CAPTURE TRACK DETAILS.
2. USE 1/2" GYPSUM BOARD ON NON-RATED PARTITIONS UNO.
3. USE 5/8" TYPE X GYPSUM BOARD ON FIRE RATED PARTITIONS.
4. CONTINUE FINISH MATERIAL TO A MINIMUM OF 4" ABOVE SUSPENDED CEILING SYSTEMS UNO.
5. WHERE NO CEILING IS INDICATED CONTINUE FINISH TO DECK UNO. MAINTAIN CLEARANCE BELOW STRUCTURE PER CAPTURE TRACK DETAILS
6. STUD PARTITIONS REQUIRING A FIRE RATING OF ONE HOUR SHALL COMPLY WITH UL#U419, UL#U465 OR UL#U442. MASONRY PARTITIONS REQUIRING ONE HOUR FIRE RATING SHALL COMPLY WITH UL#U905.
7. MAXIMUM HEIGHT OF NON LOAD BEARING WALL ABOVE HEADER TO BE 14'-9"
8. REF SPECIFICATIONS FOR LATERAL BRACING OF STUD PARTITIONS.
9. PROVIDE ALTERNATING DIAGONAL METAL STUD BRACING ABOVE THE CEILING FOR INTERIOR WALL STUDS THAT DO NOT GO TO DECK. REF 4 - A6.1
10. USE GYPSUM BOARD BEHIND ALL FRP BOARD UNO.
11. WHERE NO CEILING IS SCHEDULED, STOP 1/2" PLYWOOD SUBSTRATE AT 10'-0" AFF.
12. PROVIDE FIRE BLOCKING AT FLOOR AND ROOF LEVELS, CONCEALED SPACES BETWEEN STAIRWAY STRINGERS, PENETRATIONS IN FLOOR/CEILING ASSEMBLIES AND OTHER LOCATIONS AS REQUIRED BY CODE.
13. ROOMS THAT HAVE 5/8" IMPACT RESISTANT GYP BD TO 48" AFF NEED 5/8" GYP BD ABOVE 48" AFF.
14. ON RESTROOMS WALLS RECEIVING PORCELAIN TILE, UPPER (PAINTED) PORTION IS TO BE WATER RESISTANT GYPSUM BOARD IN LIEU OF GLASS-MAT BACKER MATERIAL.
15. WHEN MODIFYING OR BUILDING ANY NEW FIRE RATED PARTITIONS, ENSURE ALL PENETRATIONS AND JOINTS ARE SEALED IN ACCORDANCE WITH THE SPECIFICATIONS.
16. PROPERLY SEAL ALL EXISTING PENETRATIONS IN EXISTING FIREWALLS TO ACHIEVE X HOUR RATING.

WALLS WITH AN UNSUPPORTED LENGTH GREATER THAN THE LIMITS LISTED IN THE SPECIFICATIONS ARE TO BE BRACED ABOVE THE CEILING AND AT NO GREATER THAN THE MAXIMUM UNSUPPORTED LENGTH.

PARTITION LEGEND

DETAIL: X-XX

PLAN:
LETTER INDICATES PARTITION TYPE REF PLANS AND SHEET A6.1
12 A3
REFERENCE SIDE
OPPOSITE SIDE
NUMBER INDICATES STUD HEIGHT
NO NUMBER INDICATES STUD HEIGHT TO BOTTOM OF ROOF DECK TYP
NUMBER INDICATES STUD SIZE AS FOLLOWS:

1 - 1 5/8" METAL	6 - 6" METAL
2 - 2 1/2" METAL	8 - 8" CMU
3 - 3 5/8" METAL	12 - 12" CMU

*REF SPECS FOR STUD GAUGE AND SPACING

- NON-RATED GYPSUM BOARD WALL (NEW)
- ACOUSTICAL INSULATION FULL WALL THICKNESS (NEW)
- COOLER/FREEZER WALL (NEW)
- EXISTING 1 HOUR RATED GYPSUM BOARD TO REMAIN
- EXISTING PARTITION OR WALL TO REMAIN
- EXISTING WALL TO BE DEMOLISHED

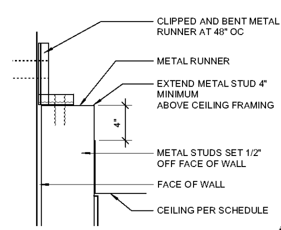

7 FURRING ATTACHMENT TO WALL
1 1/2" = 1'-0"

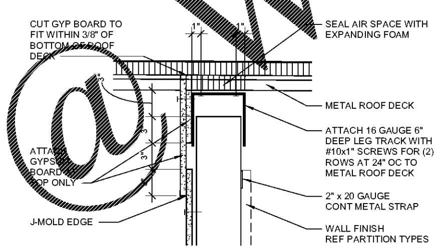

6 NON-RATED CAPTURE TRACK
1 1/2" = 1'-0"

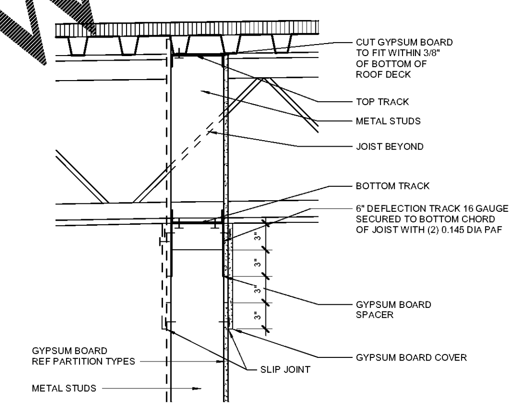

5 PARTITION ATTACHMENT AT PERPENDICULAR JOIST
1 1/2" = 1'-0"

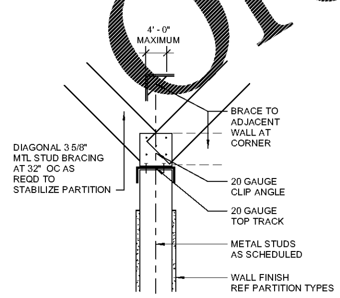

4 PARTITION BRACING
1 1/2" = 1'-0"

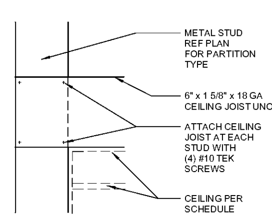

3 CEILING JOIST ATTACHMENT
1 1/2" = 1'-0"

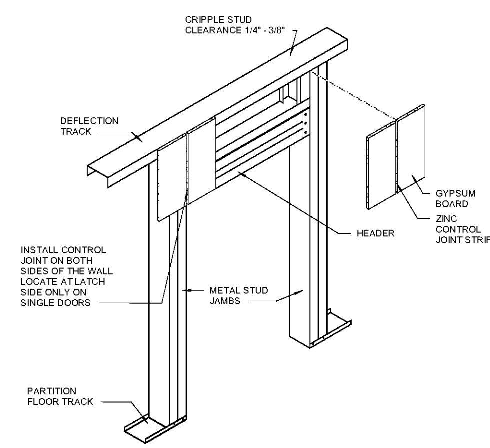

2 CONTROL JOINT AT DOOR JAMB
12" = 1'-0"

INTERIOR NON-LOAD BEARING PARTITION HEADER SCHEDULE

HEADER LENGTH	HEADER MEMBERS	HEADER TRACKS	JAMB STUDS
UP TO 4'-0"	(2) C3 5/8x1 1/4"x20 GA	(2) C3 5/8x20 GA	(2) C3 5/8x1 1/4"x20 GA
UP TO 10'-0"	(2) C6x1 5/8"x18 GA	(2) C6x18 GA	(2) C6x1 5/8"x18 GA
OVER 10'-0" & UP TO 14'-0"	(2) C8x1 5/8"x18 GA	(2) C6x18 GA	(2) C6x1 5/8"x18 GA
OVER 14'-0" & UP TO 18'-0"	(2) C8x1 5/8"x16 GA	(2) C6x16 GA	(2) C6x1 5/8"x16 GA
OVER 18'-0" & UP TO 20'-0"	(2) C10x1 5/8"x16 GA	(2) C6x16 GA	(2) C6x1 5/8"x16 GA
OVER 20'-0" & UP TO 24'-0"	(2) C12x1 5/8"x16 GA	(2) C6x16 GA	(2) C6x1 5/8"x16 GA

NOTES:
1. MAX WALL HEIGHT ABOVE HEADER ASSEMBLY IS 14'-9".
2. SPLICING OF HEADER AND JAMB MEMBERS IS NOT PERMITTED.
3. MAX SPAN FOR OPENINGS TO RECEIVE INFILL BELOW THE HEADER IS 19'-0".
4. JAMBS NOT TO DECK ARE TO BE BRACED IN ACCORDANCE WITH THE PARTITION BRACING DETAILS. 3 5/8" JAMBS BEYOND 13'-4" ARE TO BE BRACED ABOVE THE OPENING AND SUCH THAT THE MAXIMUM UNBRACED LENGTH IS NOT EXCEEDED
5. FRAMING MEMBERS ARE NOT SIZED FOR VERTICAL LOAD OTHER THAN THAT OF THE PORTION OF WALL ABOVE THE OPENING.

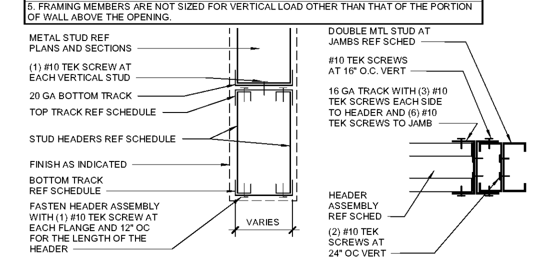

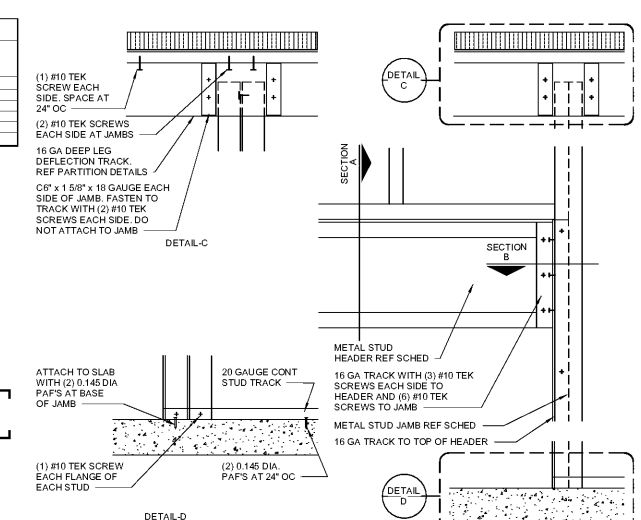

1 HEADER CONNECTION DETAIL
1 1/2" = 1'-0"

SGA Design Group, P.C.
1437 South Boulder, Suite 550
Tulsa, Oklahoma 74119.3609
p: 918.587.8600
f: 918.587.8601
www.sgadesigngroup.com

STIPULATION FOR REUSE
THIS DRAWING WAS PREPARED FOR USE ON A SPECIFIC SITE AT: PRATTVILLE, AL CONTEMPORANEOUSLY WITH ITS ISSUE DATE ON 03/31/21 AND IT IS NOT SUITABLE FOR USE ON A DIFFERENT PROJECT SITE OR AT A LATER TIME. USE OF THIS DRAWING FOR REFERENCE OR EXAMPLE ON ANOTHER PROJECT REQUIRES THE SERVICES OF PROPERLY LICENSED ARCHITECTS AND ENGINEERS. REPRODUCTION OF THIS DRAWING FOR REUSE ON ANOTHER PROJECT IS NOT AUTHORIZED AND MAY BE CONTRARY TO THE LAW.

CONSULTANTS

Walmart
PRATTVILLE, AL
1903 COBBS FORD RD
STORE NO: 0483-249
188
2021 MAJOR PROJECT
JOB NUMBER: 20694088 PROTO:

ISSUE BLOCK

CHECKED BY:	AT/RO RO/AVT
DRAWN BY:	AR/ NL / CL
PROTO CYCLE:	01/29/21
DOCUMENT DATE:	03/31/21

THE RECORD COPY OF THIS DRAWING IS ON FILE AT THE OFFICES OF SGA DESIGN GROUP. THIS ELECTRONIC DOCUMENT IS RELEASED FOR THE PURPOSE OF REFERENCE, COORDINATION, AND/OR FACILITY MANAGEMENT. THIS DRAWING SHALL NOT BE CONSIDERED FINAL OR COMPLETE UNLESS IT IS SIGNED AND SEALED BY THE ARCHITECT.

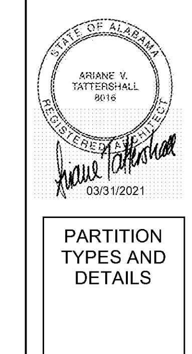

PARTITION TYPES AND DETAILS

SHEET: A6.1