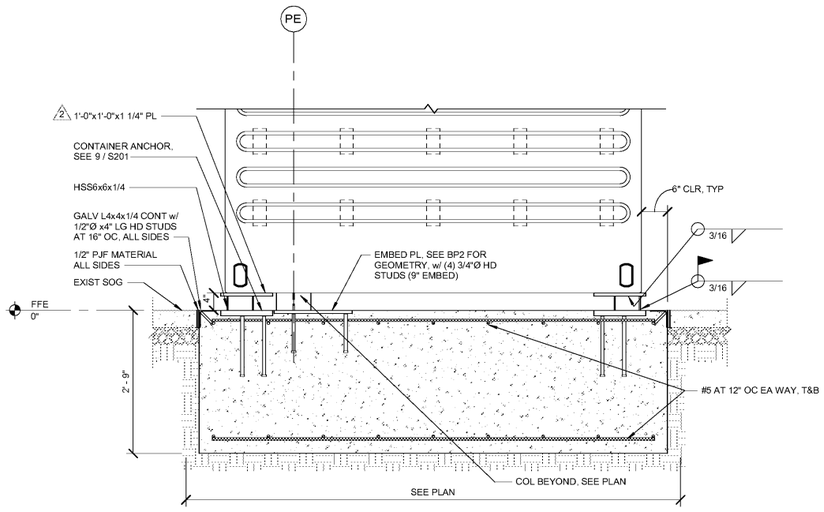

1 S202 SECTION
3/4" = 1'-0"

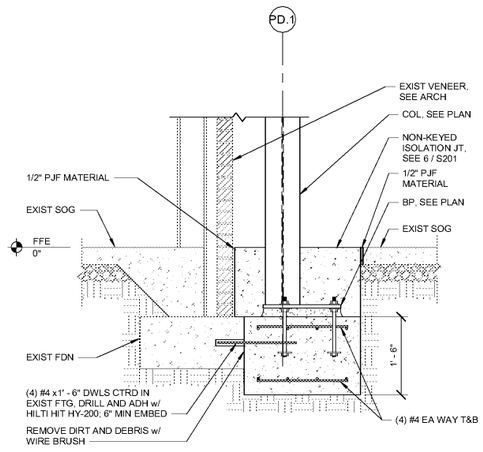

2 S202 SECTION
3/4" = 1'-0"
NOTES:
1. AT SIM, NO BRICK VENEER.

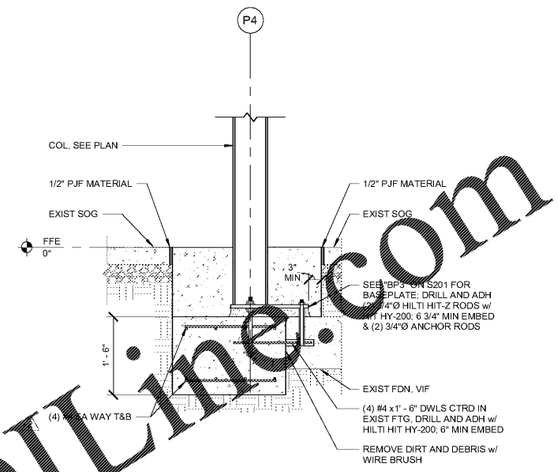

3 S202 SECTION
3/4" = 1'-0"

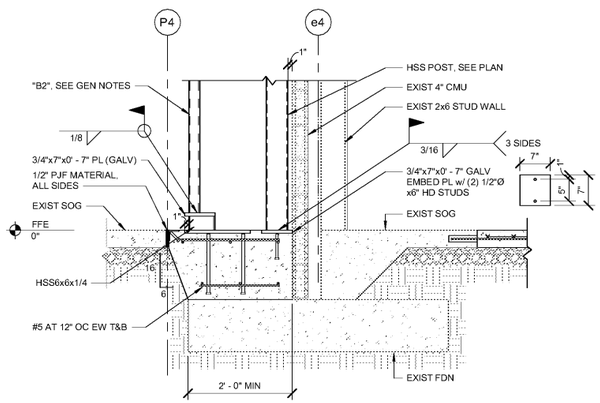

4 S202 SECTION
3/4" = 1'-0"
NOTES:
1. SEE 1 / S202 FOR DETAILS NOT SHOWN HERE.

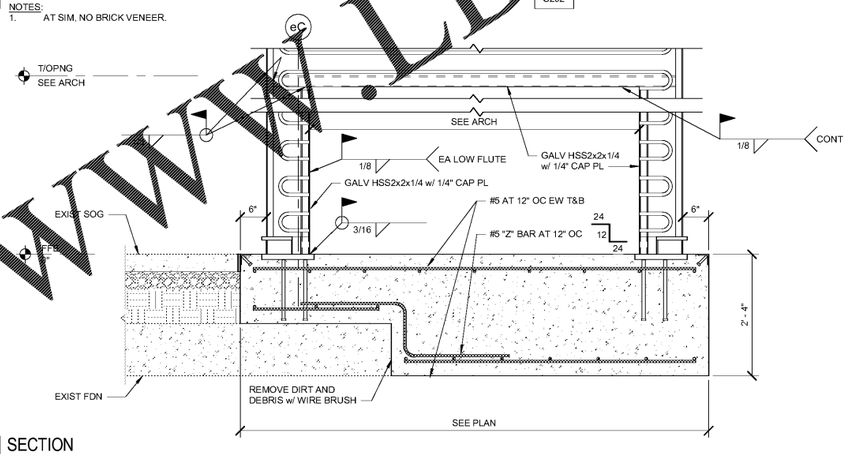

5 S202 SECTION
3/4" = 1'-0"
NOTES:
1. SEE 1/S202 FOR DETAILS NOT NOTED HERE.

Order Plans @ www.LDILine.com

CONSULTANT:
LITTLE
DIVERSIFIED ARCHITECTURAL CONSULTING
410 Blackwell St., Suite 10
Durham NC 27701
T: 919.474.2500
www.littleonline.com

2/10/2021
DANIEL P. WRAY

Bad Daddy's BURGER BAR

GOOD TIMES RESTAURANTS, INC.
141 Union Blvd. Suite 400
Lakewood, CO 80228
303-384-1430

BAD DADDY'S BURGER BAR
"EASTCHASE"
MONTGOMERY, AL 36117

Issue Record:
4.23.2019 FOR PLAN REVIEW

Revisions:
2 7.1.2019 CANOPY REVS
3 2.10.2021 TO GO REVS

Drawn:
DRAWN BY: LW

Checked:
CHECKED BY: DW,CS

Project No.:
PROJECT#: 19-207

Contents:
FOUNDATION DETAILS

2 S202

Date of Last Print: