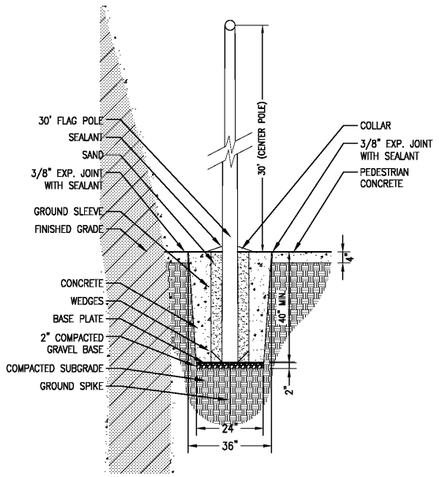

7 30' FLAGPOLE
NTS

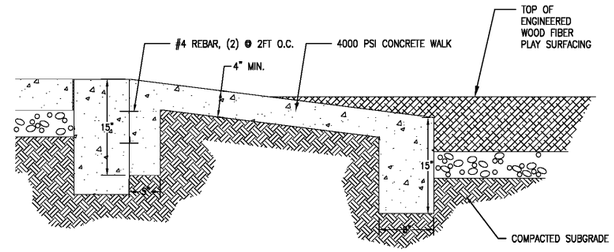

4 ADA RAMP AT PLAYGROUND
NTS

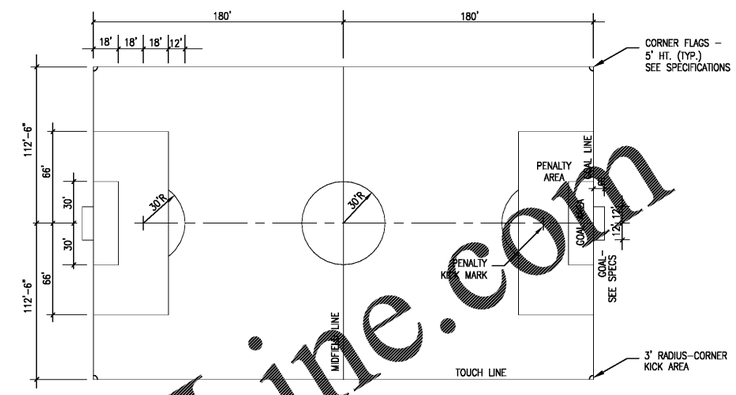

1 SOCCER FIELD LAYOUT
NTS

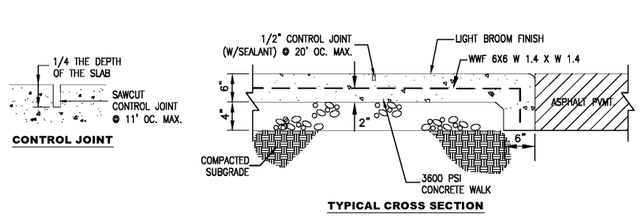

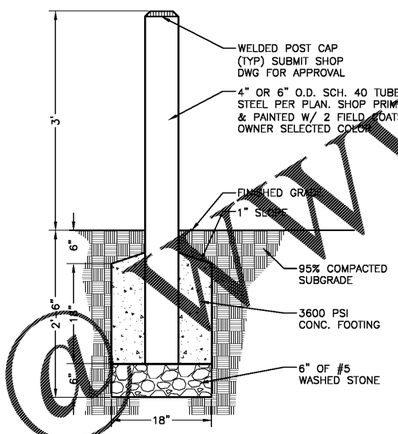

5 PERMANENT BOLLARD
NTS

NOTES:

1. CONTRACTION JOINTS SHALL BE SPACED AT 10-FOOT INTERVALS. TO PREVENT UNCONTROLLED CRACKING.
2. CONTRACTION JOINTS MAY BE INSTALLED BY THE USE OF TEMPLATES OR FORMED BY OTHER APPROVED METHODS. WHERE SUCH JOINTS ARE NOT FORMED BY TEMPLATES, A MINIMUM DEPTH OF 1-1/2" SHALL BE OBTAINED.
3. ALL EXPANSION JOINTS SHALL BE SPACED AT 90-FOOT INTERVALS, AND ADJACENT TO ALL RIGID OBJECTS. JOINTS SHALL MATCH LOCATIONS WITH JOINTS IN ABUTTING SIDEWALK.
4. CONCRETE COMPRESSIVE STRENGTH SHALL BE 3600 P.S.I. IN 28 DAYS.

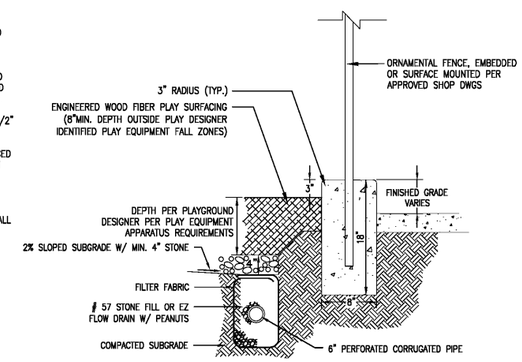

2 PLAY SURFACE CURB @ PLAZA
NTS

NOTE

1. HANG DOORS SLIGHTLY OUT OF PLUMB SO WHEN OPENED THEY STAY OPENED (UNLESS THERE IS A STRONG WIND).

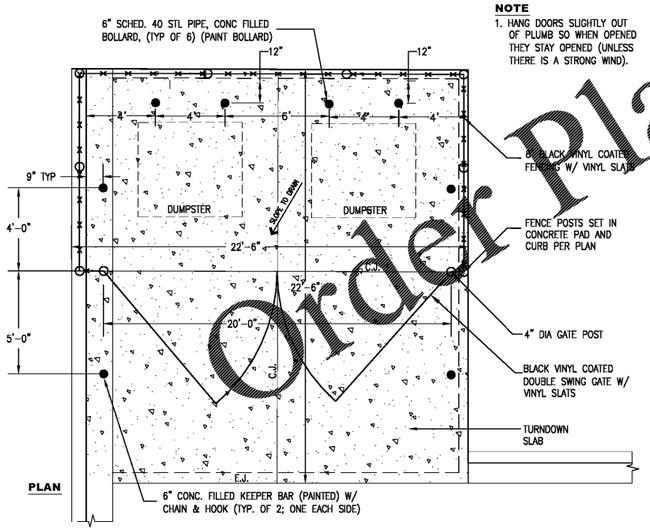

8 DUMPSTER PAD PLAN AND SECTION
NTS

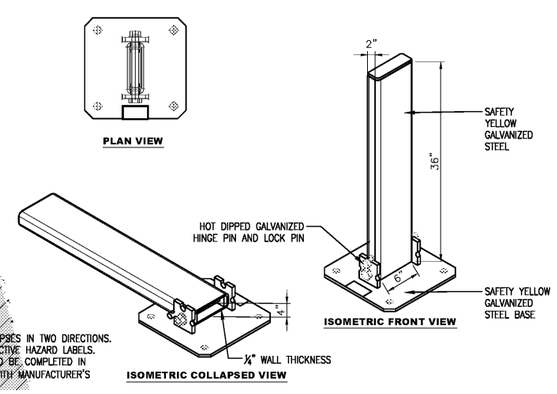

NOTES:

1. BOLLARD COLLAPSES IN TWO DIRECTIONS.
2. INCLUDE REFLECTIVE HAZARD LABELS.
3. INSTALLATION TO BE COMPLETED IN ACCORDANCE WITH MANUFACTURER'S SPECIFICATIONS.

6 TWO-WAY COLLAPSIBLE BOLLARD
NTS

NOTES:

1. CONTRACTION JOINTS SHALL BE SPACED AT 10-FOOT INTERVALS. TO PREVENT UNCONTROLLED CRACKING.
2. CONTRACTION JOINTS MAY BE INSTALLED BY THE USE OF TEMPLATES OR FORMED BY OTHER APPROVED METHODS. WHERE SUCH JOINTS ARE NOT FORMED BY TEMPLATES, A MINIMUM DEPTH OF 1-1/2" SHALL BE OBTAINED.
3. ALL EXPANSION JOINTS SHALL BE SPACED AT 90-FOOT INTERVALS, AND ADJACENT TO ALL RIGID OSJECTS. JOINTS SHALL MATCH LOCATIONS WITH JOINTS IN ABUTTING SIDEWALK.
4. CONCRETE COMPRESSIVE STRENGTH SHALL BE 3600 P.S.I. IN 28 DAYS.

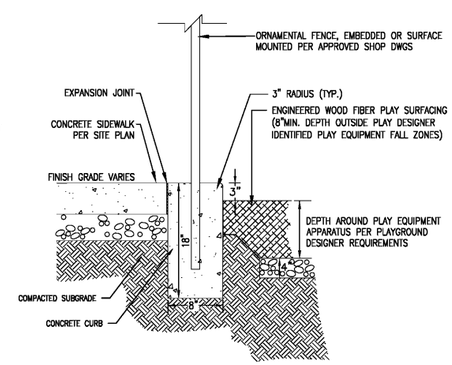

3 PLAY SURFACE, FENCE AND CONCRETE WALK SECTION
NTS

Order Plans @ www.IDILine.com

WOOLPERT
ARCHITECTURE | ENGINEERING | GEOSPATIAL
11301 Camel Commons Blvd
Suite 300
Charlotte, NC 28226
704.525.6284
FAX: 704.525.0115

STATE OF SOUTH CAROLINA
CARL F. ARMANINI #418
REGISTERED ARCHITECT
10/13/2020

SOUTH CAROLINA
WOOLPERT INC
No. C002990
CERTIFICATE OF AUTHORIZATION

Lancaster County, South Carolina
Heath Springs Soccer Complex

200 Boyd Faile Road
Heath Springs, SC 29058

Revisions:

Proj. No.: 80703
Date: 10/13/2020

Sheet Name:
Site Details

L-901

ISSUED FOR BID - 2021.02.04