9/9/2005 10:51:31 AM \\GDOT-DSN1\GOPLOT\QCF\go_tiff_output.qcf aburnett M:\ANGEL_DESIGN SERVICES\CORRECTED ENGLISH-METRIC STANDARDS\1001B.prf GO-RDG

STATE	PROJECT NUMBER	SHEET NO.	TOTAL SHEETS
GA.			

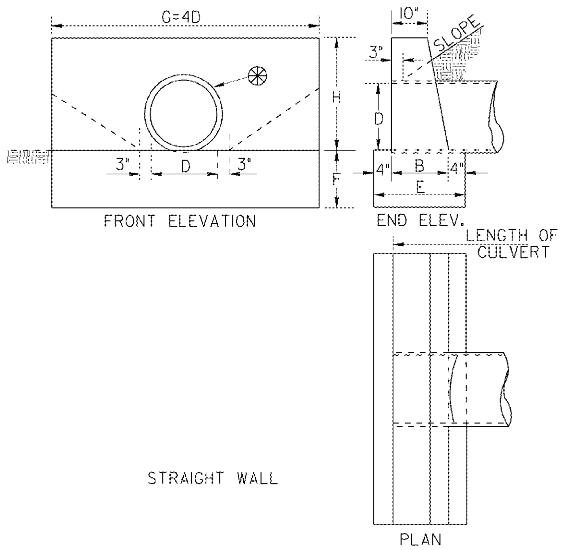

STRAIGHT WALL

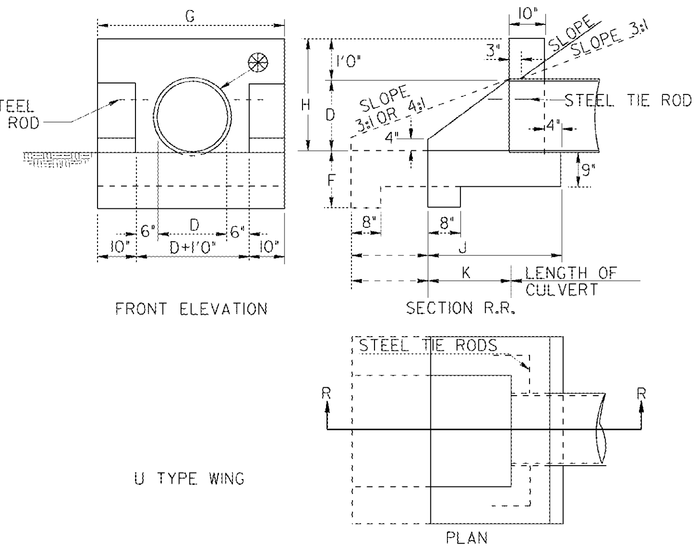

U TYPE WING

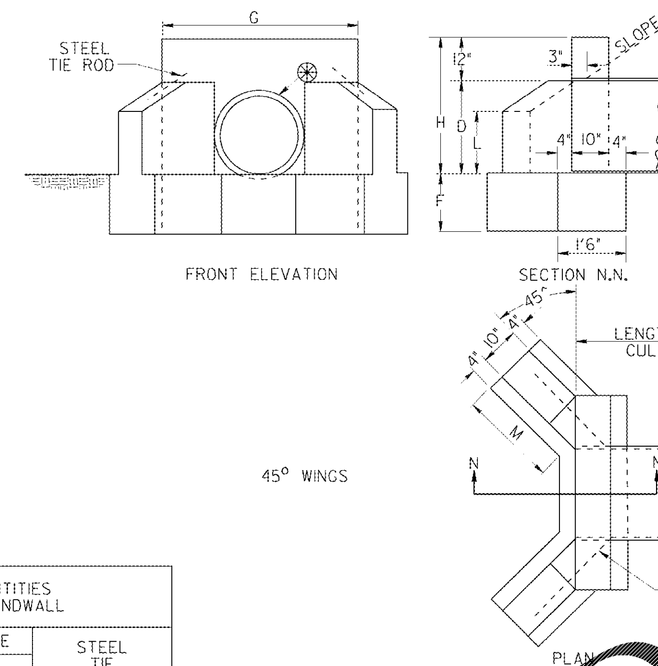

45° WINGS

INLET BEVEL DETAIL

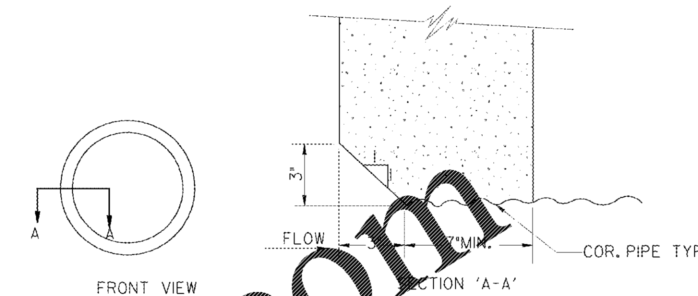

DIMENSIONS							QUANTITIES ONE STRAIGHT ENDWALL				CONC. IN WALL & FTG. FOR EACH ADDL. PIPE LINE
OPENING		WALL			FOOTING		CLASS "B" CONCRETE				
							CUBIC FEET		TOTAL		
D	AREA SQ.FT.	G	H	B	E	F	WALL	FOOT	CU.FT.	CU.YD.	CU.YD.
12"	0.8	4'0"	2'0"	1'2"	1'10"	1'0"	7.2	7.3	14.5	0.54	0.25
15"	1.2	5'0"	2'3"	1'2"	1'10"	1'2"	9.9	10.7	20.6	0.76	0.36
18"	1.8	6'0"	2'6"	1'3"	1'11"	1'3"	13.6	14.4	28.0	1.04	0.48
24"	3.1	8'0"	3'0"	1'4"	2'0"	1'4"	22.3	21.3	43.6	1.62	0.74
30"	4.9	10'0"	3'6"	1'6"	2'2"	1'6"	34.7	32.5	67.2	2.49	1.13
36"	7.1	12'0"	4'0"	1'8"	2'4"	1'8"	50.5	46.7	97.2	3.60	1.62
42"	9.6	14'0"	4'6"	1'10"	2'6"	2'0"	70.3	70.0	140.3	5.20	2.13
48"	12.6	16'0"	5'0"	2'1"	2'9"	2'0"	96.9	88.0	184.9	6.85	2.58
54"	16.0	18'0"	5'6"	2'4"	3'0"	2'0"	129.4	108.0	237.4	8.79	3.07
60"	19.6	20'0"	6'0"	2'6"	3'2"	2'0"	164.6	126.7	291.3	10.79	3.53

FOR EACH ADDITIONAL PIPE LINE, ADD TO G: OD+(ID OR 3 FEET, WHICHEVER IS SMALLER)

DIMENSIONS							QUANTITIES ONE "U" ENDWALL				STEEL TIE RODS
OPENING		WALL			FOOTING		CLASS "B" CONCRETE				
							CUBIC FEET		TOTAL		
D	AREA SQ.FT	G	H	K	F	J	WALL	FOOT	CU.FT.	CU.YD.	
					2:1 FILL SLOPES						
12"	0.8	3'8"	2'0"	1'0"	1'3"	2'2"	6.6	7.3	13.9	0.52	NONE
15"	1.2	3'11"	2'3"	1'5"	1'3"	2'7"	8.3	9.1	17.4	0.64	NONE
18"	1.8	4'2"	2'6"	1'9"	1'3"	2'11"	9.9	10.7	20.6	0.76	NONE
24"	3.1	4'8"	3'0"	2'6"	1'6"	3'8"	13.9	15.5	29.4	1.09	2-¾"DIA.x2'0"
30"	4.9	5'2"	3'6"	3'3"	1'6"	4'5"	18.7	20.0	38.7	1.43	2-¾"DIA.x2'0"
36"	7.1	5'8"	4'0"	4'0"	1'9"	5'2"	21.2	26.2	50.4	1.87	2-¾"DIA.x2'0"
42"	9.6	6'2"	4'6"	4'9"	2'0"	5'11"	30.3	33.2	63.5	2.35	2-¾"DIA.x2'6"
48"	12.6	6'8"	5'0"	5'6"	2'0"	6'8"	37.3	39.6	76.9	2.85	2-¾"DIA.x3'0"
54"	16.0	7'2"	5'6"	6'3"	2'0"	7'5"	44.2	45.9	90.1	3.33	2-¾"DIA.x3'6"
60"	19.6	7'8"	6'0"	7'0"	2'0"	8'2"	51.1	49.1	100.2	3.71	2-¾"DIA.x4'0"
					3:1 FILL SLOPES						
12"	0.8	3'8"	2'0"	2'0"	1'3"	3'2"	7.7	9.9	17.6	0.65	NONE
15"	1.2	3'11"	2'3"	2'9"	1'3"	3'11"	10.0	12.8	22.8	0.84	NONE
18"	1.8	4'2"	2'6"	3'6"	1'3"	4'8"	12.5	16.0	28.5	1.06	NONE
24"	3.1	4'8"	3'0"	5'0"	1'6"	6'2"	18.8	24.0	42.8	1.58	2-¾"DIA.x2'0"
30"	4.9	5'2"	3'6"	6'6"	1'6"	7'8"	26.3	32.3	58.6	2.17	2-¾"DIA.x2'0"
36"	7.1	5'8"	4'0"	8'0"	1'9"	9'2"	35.1	42.8	77.9	[illegible]	2-¾"DIA.x2'0"
42"	9.6	6'2"	4'6"	9'6"	2'0"	10'8"	45.4	54.5	99.9	[illegible]	2-¾"DIA.x2'6"
48"	12.6	6'8"	5'0"	11'0"	2'0"	12'2"	56.9	66.5	123.4	4.57	2-¾"DIA.x3'0"
54"	16.0	7'2"	5'6"	12'6"	2'0"	13'8"	66.7	79.5	146.2	5.41	2-¾"DIA.x3'6"
60"	19.6	7'8"	6'0"	13'4"	2'0"	17'2"	81.0	87.9	168.9	6.25	2-¾"DIA.x4'0"
					4:1 FILL SLOPES						
12"	0.8	3'8"	2'0"	2'8"	1'3"	3'10"	[illegible]	[illegible]	[illegible]	0.75	NONE
15"	1.2	3'11"	2'3"	3'8"	1'3"	4'10"	[illegible]	[illegible]	[illegible]	0.98	NONE
18"	1.8	4'2"	2'6"	4'8"	1'3"	5'10"	[illegible]	[illegible]	[illegible]	1.26	NONE
24"	3.1	4'8"	3'0"	6'8"	1'6"	7'10"	22.0	[illegible]	51.8	1.92	2-¾"DIA.x2'0"
30"	4.9	5'2"	3'6"	8'8"	1'6"	9'10"	[illegible]	40.7	72.0	2.67	2-¾"DIA.x2'0"
36"	7.1	5'8"	4'0"	10'8"	[illegible]	11'10"	42.5	54.1	[illegible]	3.58	2-¾"DIA.x2'0"
42"	9.6	6'2"	4'6"	12'8"	[illegible]	[illegible]	55.4	69.2	124.6	4.61	2-¾"DIA.x2'6"
48"	12.6	6'8"	5'0"	14'8"	2'0"	15'10"	70.0	84.8	154.8	5.73	2-¾"DIA.x3'0"
54"	16.0	7'2"	5'6"	[illegible]	[illegible]	17'10"	86.4	101.9	188.3	6.97	2-¾"DIA.x3'6"
60"	19.6	7'8"	[illegible]	[illegible]	[illegible]	19'10"	104.7	120.5	225.2	8.34	2-¾"DIA.x4'0"

DIMENSIONS							QUANTITIES ONE ENDWALL WITH 45° WING WALLS				STEEL TIE RODS
OPENING		WALL			FOOTING		CLASS "B" CONCRETE				
							CUBIC FEET		TOTAL		
D	AREA SQ.FT.	H	G	L	M	F	WALL	FOOT	CU.FT.	CU.YD.	
					2:1 SLOPES						
18"	1.8	[illegible]	3'10"	1'2"	1'7"	1'3"	9.3	10.7	20.0	0.74	NONE
24"	3.1	[illegible]	4'4"	1'5"	2'1"	1'4"	13.1	14.4	27.5	1.02	2-¾"DIA.x2'0"
30"	4.9	3'6"	4'10"	1'9"	2'5"	1'6"	17.4	18.8	36.7	1.34	2-¾"DIA.x2'0"
[illegible]	7.1	4'0"	5'4"	2'0"	2'11"	1'8"	22.6	24.6	47.2	1.75	2-¾"DIA.x3'0"
42"	9.6	4'6"	5'10"	2'3"	3'6"	2'0"	29.1	34.6	63.7	2.36	2-¾"DIA.x3'0"
48"	12.6	5'0"	6'4"	2'6"	4'0"	2'0"	35.9	39.1	75.0	2.78	2-¾"DIA.x3'0"
54"	16.0	5'6"	6'10"	2'9"	4'6¼"	2'0"	42.9	46.6	89.5	3.31	2-¾"DIA.x3'0"
60"	19.6	6'0"	7'4"	3'0"	5'0½"	2'0"	51.8	51.1	102.9	3.81	2-¾"DIA.x3'0"
					3:1 SLOPES						
18"	1.8	2'6"	3'10"	1'2"	1'9"	1'3"	10.7	14.5	25.2	0.93	NONE
24"	3.1	3'0"	4'4"	1'5"	2'10"	1'4"	16.6	17.8	34.4	1.27	2-¾"DIA.x2'0"
30"	4.9	3'6"	4'10"	1'9"	3'6"	1'6"	22.9	24.4	47.3	1.71	2-¾"DIA.x2'0"
36"	7.1	4'0"	5'4"	2'1"	4'3"	1'8"	30.2	32.0	62.2	2.30	2-¾"DIA.x3'0"
42"	9.6	4'6"	5'10"	2'5"	4'11"	2'0"	38.8	44.0	82.8	3.07	2-¾"DIA.x3'0"
48"	12.6	5'0"	6'4"	2'8"	5'6"	2'0"	47.5	48.6	96.1	3.56	2-¾"DIA.x3'0"
54"	16.0	5'6"	6'10"	3'2"	6'1"	2'0"	57.0	53.4	110.4	4.09	2-¾"DIA.x3'0"
60"	19.6	6'0"	7'4"	3'6"	6'9"	2'0"	68.5	59.1	127.6	4.73	2-¾"DIA.x3'0"

METHOD OF EXTENDING PIPE AND RETAINING EXISTING HEADWALL

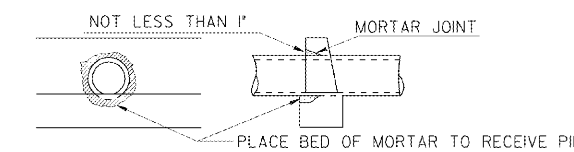

CONCRETE WITHIN THE HATCHED AREA TO BE REMOVED BY CHIPPING OR IN A MANNER APPROVED BY THE ENGINEER, FORMING A RECESS NO LESS THAN 1" LARGER THAN THE OUTSIDE DIMENSION OF THE PIPE.

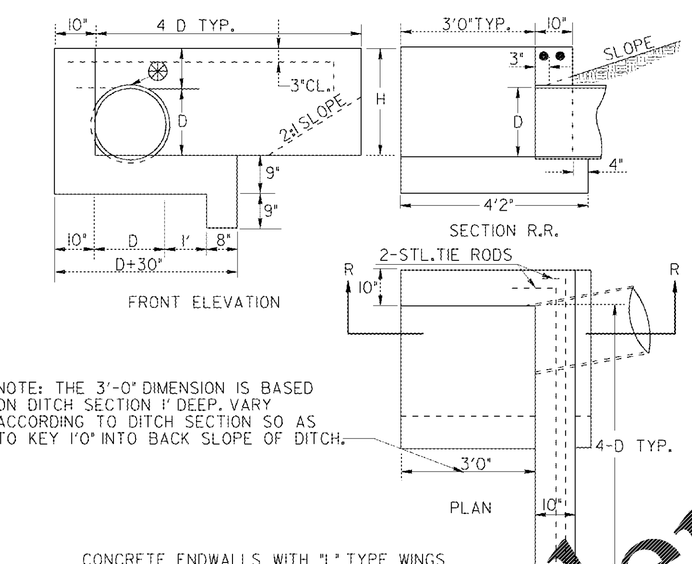

NOTE: THE 3'-0" DIMENSION IS BASED ON DITCH SECTION 1' DEEP. VARY ACCORDING TO DITCH SECTION SO AS TO KEY 1'0" INTO BACK SLOPE OF DITCH.

CONCRETE ENDWALLS WITH "L" TYPE WINGS

NOTE: THESE QUANTITIES WILL VARY ACCORDING TO DITCH SECTION AND ARE TO BE USED FOR ESTIMATING PURPOSES ONLY. PAYMENT TO BE MADE ACCORDING TO QUANTITIES MEASURED AS ACTUALLY PLACED.

DIMENSIONS					QUANTITIES ONE "L" ENDWALL	
D	AREA SQ.FT.	H MIN.	4D TYP.	D+30 TYP.	CU. YD. CONC.	STEEL TIE RODS
15"	1.2	2'3"	5'0"	3'9"	1.08	2-¾"DIA.x5'0"
18"	1.8	2'6"	6'0"	4'0"	1.24	2-¾"DIA.x6'0"
24"	3.1	3'0"	8'0"	4'6"	1.59	2-¾"DIA.x8'0"
30"	4.9	3'6"	10'0"	5'0"	2.00	2-¾"DIA.x10'0"
36"	7.1	4'0"	12'0"	5'6"	2.46	2-¾"DIA.x12'0"
42"	9.6	4'6"	14'0"	6'0"	2.98	2-¾"DIA.x14'0"
48"	12.6	5'0"	16'0"	6'6"	3.53	2-¾"DIA.x16'0"
54"	16.0	5'6"	18'0"	7'0"	4.13	2-¾"DIA.x18'0"
60"	19.6	6'0"	20'0"	7'6"	4.85	2-¾"DIA.x20'0"

3:1 FILL SLOPES

NOTE:
QUANTITIES OF CONCRETE ARE BASED ON INSIDE DIAMETER OF PIPE. NO DEDUCTIONS SHALL BE MADE FOR SHELL THICKNESS OR SKEW OF PIPE IN COMPUTING PAY QUANTITIES.

SECTION SHOWING MINIMUM COVER OVER CULVERTS

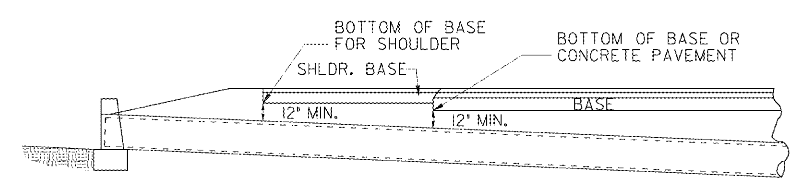

NOTE: GRADE GENERALLY TO FOLLOW SLOPE OF STREAM.

⊛ IF PIPE HAS NEITHER A GROOVE NOR A SPIGOT AT ITS INLET, AN INLET BEVEL WILL BE REQ'D.

NOTE TO DESIGNER

THIS STANDARD IS LIMITED FOR USE ONLY AT SPECIAL CONDITIONS, OTHERWISE, SEE CURRENT STANDARDS 1120 & 1125.

HEADWALLS ARE NOT TO BE PLACED INSIDE THE CLEAR ZONE.

DATE | REVISION | BY

DEPARTMENT OF TRANSPORTATION
STATE OF GEORGIA

STANDARD
PIPE CULVERT CONCRETE HEADWALL

NO SCALE

REV. & REDR. AUG. 1999

DESIGNED
TRACED
CHECKED

(SUBMITTED) STATE ROAD & AIRPORT DESIGN ENGINEER

(APPROVED) CHIEF ENGINEER

NUMBER 1001-B

Order Plans @ www.LDILine.com

9/9/2005 10:51:31 AM \\GDOT-DSN1\GOPLOT\QCF\go_tiff_output.qcf aburnett M:\ANGEL_DESIGN SERVICES\CORRECTED ENGLISH-METRIC STANDARDS\1001B.prf