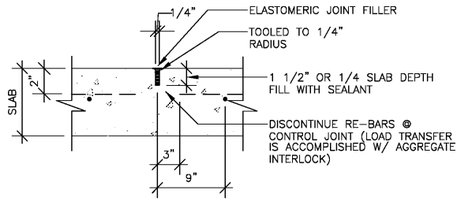

TOOLED CONTROL JOINT

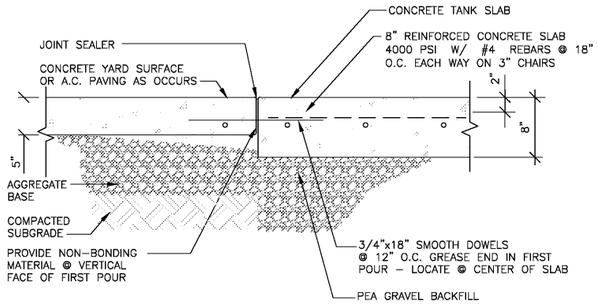

TANK SLAB EDGE

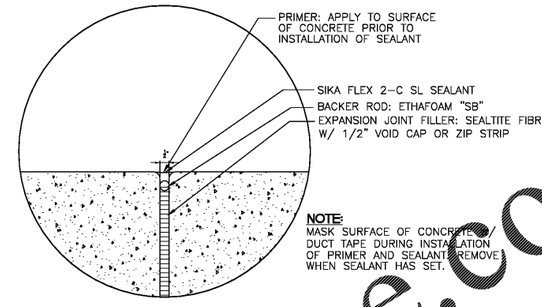

EXPANSION JOINT DETAIL

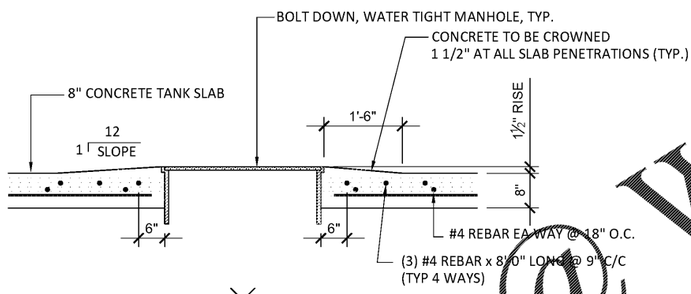

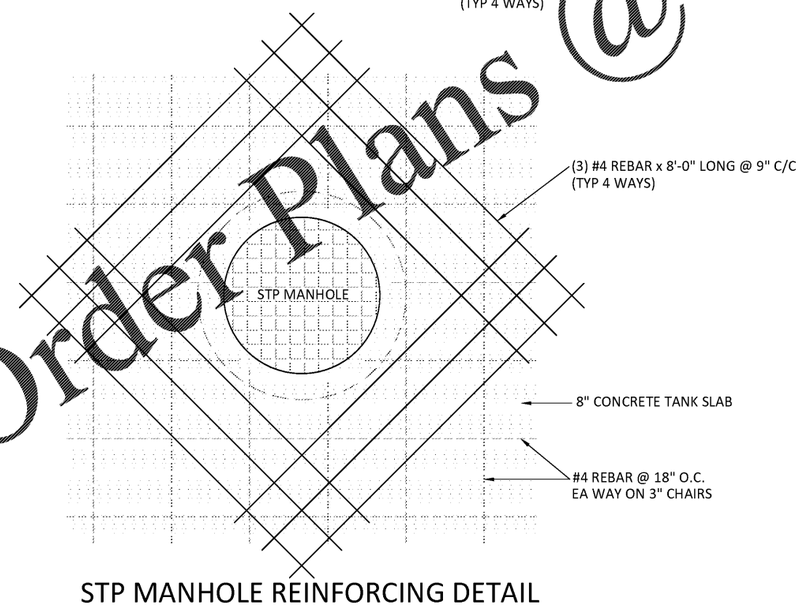

STP MANHOLE REINFORCING DETAIL

SCALE: 3/4"=1'-0"

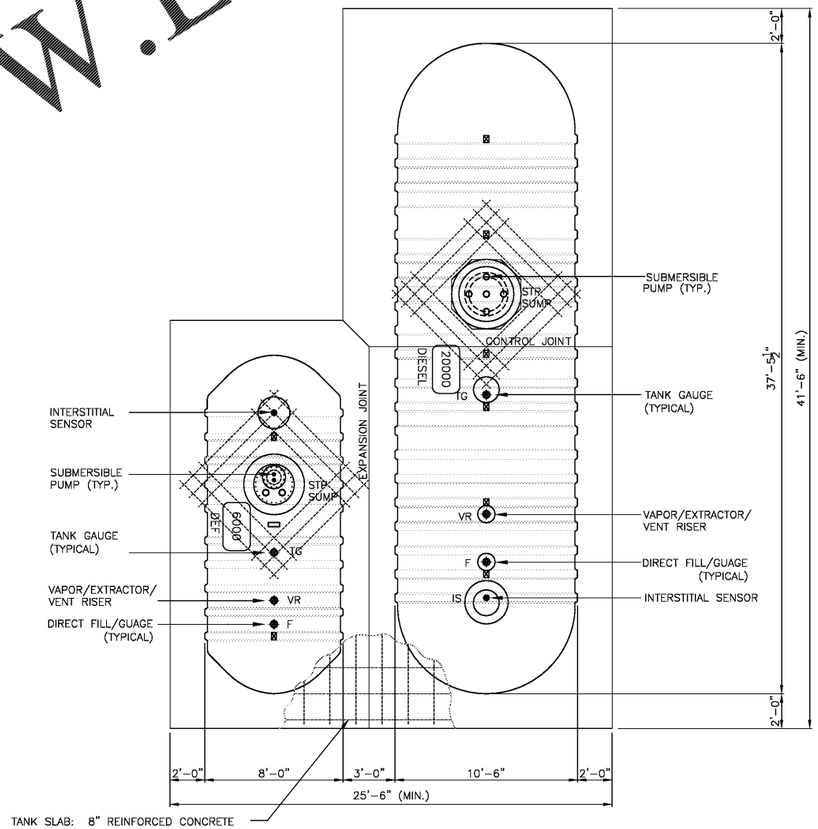

TYPICAL TANK SLAB PLAN

SCALE: 3/8" = 1'-0"

NOTE:
REFER TO SITE PLAN FOR ACTUAL TANK ORIENTATION AND TANK CONFIGURATION

Order Plans @ WWW.LDILine.com

CLIENT:

CIRCLE K STORES, INC.
SOUTH ATLANTIC DIVISION
215 PENDLETON ST
WAYCROSS, GA 31501
PHONE: (912) 285-4011

DESIGN TEAM:

MDM SERVICES, INC.
engineering • environmental • construction
1055 KATHLEEN ROAD, LAKELAND, FLORIDA 33805
(863) 646-0130
PB #004857

TANK & PIPING PLANS & SPECIFICATIONS

NO.	DATE	REVISION DESCRIPTION

BID SET 11/3/20

RICHARD R. MORRIS, P.E.
GA REG. # 013997

SITE ADDRESS:

CIRCLE K

1717 E 16th AVE.
CORDELE, CRISP COUNTY
GEORGIA

SCALE:	MDM JOB # 20183
DATE: 9/01/2020	
DESIGNED BY:	
DRAWN BY: JR	FILE NAME:
CHECKED BY:	

DRAWING TITLE:

TANK PAD PLAN & DETAILS

SHEET NO:

TA-3.0