Catalog #: MRM LED 36L SIL FTA UNV DIM 50 70CRI ALSCS04 BRZ IL | Project: O'Reilly Auto Parts
Prepared By: | Date:

Mirada Medium - MRM
Outdoor LED Area Light

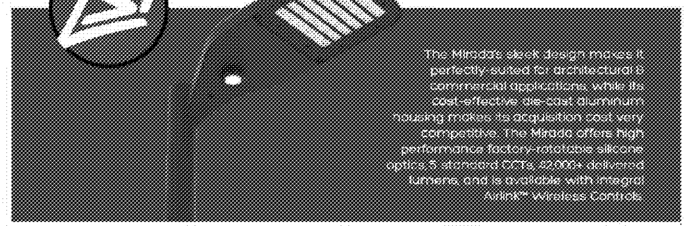

IP66 · RoHS · ARRA · UL Listed · USA · IDA

Features & Specifications

Optical System
- State-of-the-Art one piece silicone optic sheet delivers industry leading optical control with an integrated gasket to provide IP66 rated sealed optical chamber in 1 component.
- Proprietary silicone refractor optics provide exceptional coverage and uniformity in IES Types 2, 3, 5W, FT and FTA.
- Silicone optical material does not yellow or crack with age and provides a typical light transmittance of 93%.
- Zero uplight.
- Available in 5000K, 4000K, 3000K, and 2700K color temperatures per ANSI C78.377. Also available in Phosphor Converted Amber, consult factory for availability.
- Minimum CRI of 70. Optional 80 CRI available, consult factory for lead time.
- Integral Louver (IL) option available for improved back-light control without sacrificing street side performance. See page 5 for more details.

Electrical
- High-performance driver features over-voltage, under-voltage, short-circuit and over temperature protection.
- 0-10V dimming (10% - 100%) standard.
- Standard Universal Voltage (120-277 Vac) Input 50/60 Hz or optional High Voltage (347-480 Vac).
- L90 Calculated Life: >100k Hours (See Lumen Maintenance on Page 3)
- Total harmonic distortion: <20%
- Operating temperature: -40°C to +50°C (-40°F to +122°F). 42L lumen package rated to +40°C.
- Power factor: >.90
- Input power stays constant over life.
- Field replaceable surge protection device meets a minimum Category C Low operation (per ANSI/IEEE C62.41.2).
- High-efficacy LEDs mounted to metal-core circuit board to maximize heat dissipation
- Terminal block provided accepts up to 10ga wire.
- Components are fully encased in potting material for moisture resistance. Driver complies with FCC standards. Driver and key electronic components can easily be accessed.

Product Dimensions

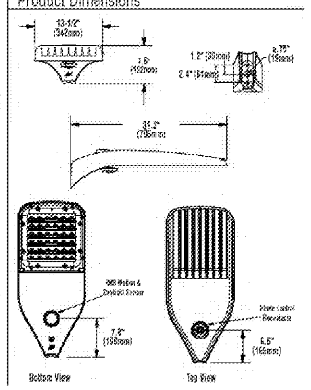

LSI Industries Inc. 10000 Alliance Rd. Cincinnati, OH 45242 • www.lsi-industries.com • (800) 436-7800 • ©LSI Industries Inc. All Rights Reserved.

Mirada Medium - MRM
Outdoor LED Area Light

Features & Specifications (Cont.)

Construction
- Rugged die-cast aluminum housing contains factory prewired drivers and optical unit. Cast aluminum wiring access door located underneath.
- Designed to mount to square or round poles.
- Luminaire is proudly manufactured in the U.S.A. of U.S. and imported parts.
- IP66 rated luminaire protects integral components from harsh environments.
- 3G rated for ANSI C136.31 high vibration applications.
- Fixtures are finished with LSI's DuraGrip® polyester powder coat finishing process. The DuraGrip finish withstands extreme weather changes without cracking or peeling. Other standard LSI finishes available. Consult factory.
- Shipping weight: 36 lbs in carton.

Controls

Wireless Controls System

To make this fixture AirLink ready, simply order one of the following options:
a. The integrated Wireless Lighting Controller: ALSC or ALSCH (see ordering guide as the controls option), or
b. Integrated Wireless Controller option (shown) with integrated motion sensor: ALSCS (ordering guide for mounting heights), or
c. The 7-Pin Photoelectric Control Receptacle: CR7P as the controls option, and either the 5-Pin or 7-Pin Twist Lock Controller: ALSC UNV TLS or ALSC UNV TL7 as an accessory.

To see how the components of AirLink system work together, reference the diagram in the controls section of this specsheet. For more information on our AirLink products, visit our website: www.lsi-industries.com/airlink-overview

Stand-Alone Controls
- The integral passive infrared motion sensor (IMS) activates switching of luminaire light levels (see the controls section for more details).
- The 7-pin ANSI C136.41-2013 photocontrol receptacle option (CR7P) is available for twist lock photocontrols or wireless control modules.
- The Button Type Photocells (PC) are capable of switching luminaires ON-OFF in response to the amount of available daylight.

Installation
- A single fastener secures the hinged door, underneath the housing and provides quick & easy access to the electrical compartment for installing/servicing.
- Included terminal block provides quick and easy on-site wiring.
- Utilizes LSI's traditional 3" drill pattern for easy fastening of LSI products. (See drawing on page 1)

Warranty
- LSI LED Fixtures carry a 5-year warranty.

Listings
- Listed to UL 1598 and UL 8750.
- RoHS Compliant.
- American Recovery and Reinvestment Act Funding Compliant.
- IDA compliant, with 3000K color temperature selection.
- Title 24 Compliant; see local ordinance for qualification information.
- Suitable for wet Locations.
- IP66 rated Luminaire, IP66 rated optical chamber.
- 3G rated for ANSI C136.31 high vibration applications

Performance

ELECTRICAL DATA (AMPS)*

Lumens	Watts	120V	208V	240V	277V	347V	480V
[illegible]	[illegible]	[illegible]	[illegible]	[illegible]	[illegible]	[illegible]	[illegible]

*Electrical data at 25C (77F). Actual wattage may differ by +/-10%.

ELECTRICAL DATA - PHOSPHOR CONVERTED AMBER (AMPS)*

Lumens	Watts	120V	208V	240V	277V	347V	480V
[illegible]	[illegible]	[illegible]	[illegible]	[illegible]	[illegible]	[illegible]	[illegible]

*Electrical data at 25C (77F). Actual wattage may differ by +/-10%.

RECOMMENDED LUMEN MAINTENANCE¹ (24-42L)

Ambient	Initial²	25 hr³	50 hr³	75 hr³	100 hr³
[illegible]	[illegible]	[illegible]	[illegible]	[illegible]	[illegible]

RECOMMENDED LUMEN MAINTENANCE¹ (7-18L)

Ambient	Initial²	25 hr³	50 hr³	75 hr³	100 hr³
[illegible]	[illegible]	[illegible]	[illegible]	[illegible]	[illegible]

DELIVERED LUMENS¹ (Phosphor Converted Amber)

Lumen Package	Distribution	Delivered Lumens	Efficacy	BUG Rating	Wattage
[illegible]	[illegible]	[illegible]	[illegible]	[illegible]	[illegible]

*LED Chips are frequently updated therefore values are nominal.

LUMINAIRE EPA CHART

Single	[illegible]	
D180°	[illegible]	
T90°	[illegible]	
TN120°	[illegible]	
Q90°	[illegible]	

Specifications and dimensions subject to change without notice.

LSI Industries Inc. 10000 Alliance Rd. Cincinnati, OH 45242 • www.lsi-industries.com • (800) 436-7800 • ©LSI Industries Inc. All Rights Reserved.

Mirada Medium - MRM
Outdoor LED Area Light

DELIVERED LUMENS¹

Lumen Package	Distribution	CRI	Delivered Lumens (5000K CCT)	Efficacy	BUG Rating	Delivered Lumens (4000K CCT)	Efficacy	BUG Rating	Delivered Lumens (3000K CCT)	Efficacy	BUG Rating	Delivered Lumens (2700K CCT)	Efficacy	BUG Rating	Wattage
[illegible]	[illegible]	[illegible]	[illegible]	[illegible]	[illegible]	[illegible]	[illegible]	[illegible]	[illegible]	[illegible]	[illegible]	[illegible]	[illegible]	[illegible]	[illegible]

*LED Chips are frequently updated therefore values are nominal.

LSI Industries Inc. 10000 Alliance Rd. Cincinnati, OH 45242 • www.lsi-industries.com • (800) 436-7800 • ©LSI Industries Inc. All Rights Reserved.

Catalog #: | Project:
Prepared By: | Date:

Mirada Wall Sconce - XWM
Outdoor LED Wall Sconce

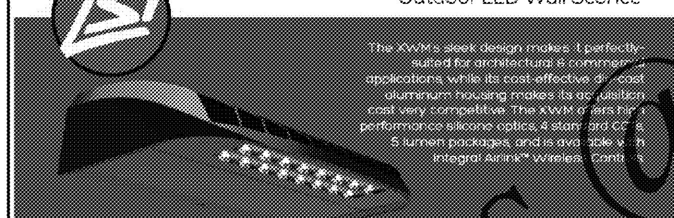

IP66 · RoHS · ARRA · UL Listed · USA · IDA · DLC

Features & Specifications

Optical System
- State-of-the-Art one piece silicone optic sheet delivers industry leading optical control with an integrated gasket to provide IP66 rated sealed optical chamber in 1 component.
- Proprietary silicone refractor optics provide exceptional coverage and uniformity in IES Types 2, 3, and Forward Throw.
- Silicone optical material does not yellow or crack with age and provides a typical light transmittance of 93%.
- Zero uplight.
- Available in 5000K, 4000K, 3000K, and 2700K color temperatures per ANSI C78.377.
- Minimum CRI of 70.

Electrical
- High-performance driver features over-voltage, under-voltage, short-circuit and over temperature protection.
- 0-10V dimming (10% - 100%) standard.
- Standard Universal Voltage (120-277 Vac) Input 50/60 Hz or optional High Voltage (347-480 Vac).
- L90 Calculated Life: >100k Hours (See Lumen Maintenance on Page 2)
- Total harmonic distortion: <20%
- Operating temperature: -40°C to +50°C (-40°F to +122°F).
- Power factor: >.90
- Input power stays constant over life.
- Field replaceable surge protection device meets a minimum Category C Low operation (per ANSI/IEEE C62.41.2).
- High-efficacy LEDs mounted to metal-core circuit board to maximize heat dissipation
- Terminal block provided accepts up to 10ga wire.
- Components are fully encased in potting material for moisture resistance. Driver complies with FCC standards. Driver and key electronic components can easily be accessed via hinged door.
- Optional 120v-277v integral emergency battery pack is available. The 90-minute batteries provide constant power to the LED system, ensuring code compliance. A test switch/indicator button is installed on the housing for ease of maintenance. Operating temperature for standard battery backup: -0°C to +50°C (+32°F to +122°F), Cold Weather battery backup: -20°C to +50°C (-4°F to +122°F).

Product Dimensions

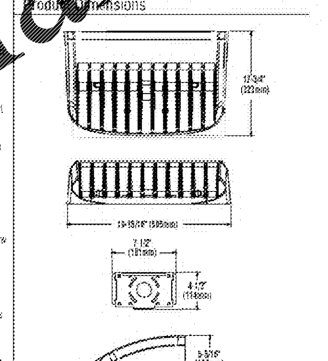

LSI Industries Inc. 10000 Alliance Rd. Cincinnati, OH 45242 • www.lsi-industries.com • (800) 436-7800 • ©LSI Industries Inc. All Rights Reserved.

Mirada Wall Sconce - XWM
Outdoor LED Wall Sconce

Ordering Guide

TYPICAL ORDER EXAMPLE: XWM 3 LED 03L 27 UE BRZ ALSC

Luminaire Prefix	Distribution	LED Technology	Lumen Packages¹	Color Temp	Voltage	Finish	Controls (Choose One)	Options
XWM - Mirada Wall Sconce	2 - Type 2 3 - Type 3 FT - Type 4 Forward Throw	LED	3L - 3,000 lms 6L - 6,000 lms 8L - 8,000 lms 9L - 9,000 lms 12L - 12,000 lms Consult factory for ... lumen packages	27 - 2700K 30 - 3000K 40 - 4000K 50 - 5000K	UE - Universal Voltage (120-277V) HV - High Voltage (347-480V)	BRZ - Bronze BLK - Black GPT - Graphite MSV - Metallic Silver WHT - White PLP - Platinum Plus SVG - Satin Verde Green	**Wireless Controls** ALSC - AirLink Synapse Control System ALSCS01 - AirLink Synapse Control System with 8-12' Motion Sensor ALSCS02 - AirLink Synapse Control System with 12-20' Motion Sensor **Stand-Alone Controls** EXT - 0-10v dimming (from external signal) IMSBM1 - Integral Motion & daylight sensor 8-12' (120-277V) IMSBM2 - Integral Motion & daylight sensor 12-20' (120-277V) IMSBM1HV - Integral Motion & daylight sensor 8-12' (347-480V) IMSBM2HV - Integral Motion & daylight sensor 12-20' (347-480V) **Button Type Photocells** PC120 - 120V PC208-277 - 208-277V PC347 - 347V	EB - Emergency Battery CWBB - Cold Weather Battery Backup XPMA - Pole Mounting Bracket

Accessory Ordering Information

Description	Order Number	Description	Order Number
XWM ... - Surface Wiring Box (available in black only)	[illegible]	DFK208 - Double Fusing	[illegible]
SFK120 - Single Fusing	[illegible]	DFK240 - Double Fusing	[illegible]
SFK277 - Single Fusing	[illegible]	DFK480 - Double Fusing	[illegible]
SFK347 - Single Fusing	[illegible]	IMS Remote Configuration Tool	[illegible]

FOOTNOTES:
1 - Consult factory for availability
2 - Not available in HV
3 - Consult factory for site layout
4 - IMS is field adjustable, via a hand held Remote Configuration Tool, which must be ordered separately. See Accessory Ordering Information.
5 - Not available in HV
6 - "CLR" denotes finish. See Finish options.
7 - Fusing must be located in hand hole of pole or in the junction box.

LSI Industries Inc. 10000 Alliance Rd. Cincinnati, OH 45242 • www.lsi-industries.com • (800) 436-7800 • ©LSI Industries Inc. All Rights Reserved.

Mirada Medium - MRM
Outdoor LED Area Light

Performance (Cont.)

All published luminaire photometric testing performed to IESNA LM-79 standards. ISO footcandle plots below demonstrate the Mirada (MRM) light patterns only. Not for total fixture output. For complete specifications and IES files, see website.

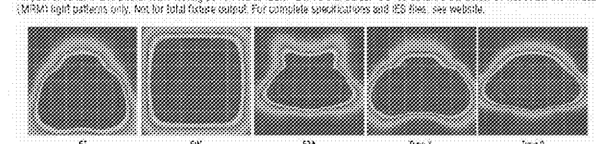

Ordering Guide

TYPICAL ORDER EXAMPLE: MRM LED 36L SIL FTA UNV DIM 50 70CRI ALSCS04 BRZ IL

Luminaire Prefix	Light Source	Lumen Package	Light Output	Distribution	Orientation	Voltage	Driver
MRM - Mirada	LED	7L - 7,000 lms 9L - 9,000 lms 12L - 12,000 lms 18L - 18,000 lms 24L - 24,000 lms 30L - 30,000 lms 36L - 36,000 lms 42L - 42,000 lms Consult factory for ... wattages and ... lumen packages	SIL - Silicone	2 - Type 2 3 - Type 3 5W - Type 5 Wide FT - Forward Throw FTA - Forward Throw Automotive	(blank) - Standard L - Optics rotated left 90° R - Optics rotated right 90°	UNV - Universal Voltage (120-277V) HV - High Voltage (347-480V)	DIM - 0-10V Dimming (10%-100%)

Color Temp	Color Rendering	Controls (Choose One)	Finish	Options
50 - 5,000 CCT 40 - 4,000 CCT 30 - 3,000 CCT 27 - 2,700 CCT AMB - Phosphor Converted Amber¹	70CRI - 70 CRI 80CRI - 80 CRI	(Blank) - None **Wireless Controls System** ALSC - AirLink Synapse Control System¹ ALSCH - AirLink Synapse Control System Host / Gateway¹ ALSCS01 - AirLink Synapse Control System with 8-12' Motion Sensor¹ ALSCHS01 - AirLink Synapse Control System Host / Gateway with 8-12' Motion Sensor¹ ALSCS02 - AirLink Synapse Control System with 12-20' Motion Sensor¹ ALSCHS02 - AirLink Synapse Control System Host / Gateway with 12-20' Motion Sensor¹ ALSCS04 - AirLink Synapse Control System with 20-40' Motion Sensor¹ ALSCHS04 - AirLink Synapse Control System Host / Gateway with 20-40' Motion Sensor¹ **Stand-Alone Controls** EXT - 0-10v Dimming (from external signal) IMSBM1 - Integral Motion Sensor 8-12' 120-277V IMSBM2 - Integral Motion Sensor 12-20' 120-277V IMSBM4 - Integral Motion Sensor 20-40' 120-277V IMSBM1HV - Integral Motion Sensor 8-12' 347-480V IMSBM2HV - Integral Motion Sensor 12-20' 347-480V IMSBM4HV - Integral Motion Sensor 20-40' 347-480V CR7P - 7 Pin Control Receptacle ANSI C136.41 **Button Type Photocells** PC120 - 120V PC208-277 - 208-277V PC347 - 347V	BRZ - Bronze BLK - Black GPT - Graphite MSV - Metallic Silver WHT - White PLP - Platinum Plus SVG - Satin Verde Green	(Blank) - None IL - Integral Louver

LSI Industries Inc. 10000 Alliance Rd. Cincinnati, OH 45242 • www.lsi-industries.com • (800) 436-7800 • ©LSI Industries Inc. All Rights Reserved.

02/28/2020

DRAWN BY: CEV

CRAIG A. SCHNEIDER, AIA
ARCHITECT
1736 East Sunshine, Suite 417
Springfield, Missouri 65804
417.862.0558
Fax: 417.862.3265
e-mail: architect@csteriyschneider.com

PROJECT:
NEW O'REILLY AUTO PARTS STORE
CLEVELAND HIGHWAY
VARNELL, GA

SITE LIGHTING DETAILS

O'Reilly AUTO PARTS
CORPORATE OFFICES
233 SOUTH PATTERSON
SPRINGFIELD, MISSOURI 65802
(417) 862-2674 TELEPHONE

COMM # 4420
DATE: 02-28-2020
REVISION DATE:

SGE
SMITH-GOTH ENGINEERS, INC.
3855 S. Jefferson Ave. Springfield, MO 65807
P: 417-882-2200 F: 417-882-1188
WWW.SMITHGOTH.COM

C COPYRIGHT 2019-2020 - DESIGNS, DRAWINGS AND SPECIFICATIONS ARE INSTRUMENTS OF SERVICE AND ARE THE PROPERTY OF THE DESIGN PROFESSIONAL. REPRODUCTION PROHIBITED WITHOUT THE EXPRESSED WRITTEN CONSENT OF THE DESIGN PROFESSIONAL.

Order Plans @ WWW.LDILine.com