ROOM FINISH SCHEDULE - TOWER

ROOM NUMBER	ROOM NAME	AREA	FLOOR FINISH	BASE FINISH	WALL FINISH	CEILING FINISH
T 100	STORAGE	222 SF	EXISTING	EXISTING	EXISTING	EXISTING
T 200	SCOREKEEPING	243 SF	EXISTING	EXISTING	EXISTING	EXISTING

FLOOR PLAN LEGEND

GENERAL NOTES

1. DO NOT SCALE DRAWINGS, USE WRITTEN DIMENSIONS ONLY. SUBMIT TO ARCHITECT ANY DISCREPANCIES FOR CLARIFICATION.
2. ALL WORK SHALL BE IN COMPLIANCE WITH CURRENT BUILDING CODE, GENERAL CONDITIONS OF THE CONTRACT FOR CONSTRUCTION, RECOGNIZED INDUSTRY STANDARDS, CRAFTSMANSHIP STANDARDS IN THE AREA, ALL MANUFACTURERS' RECOMMENDATIONS, AND ALL OTHER APPLICABLE CODES.
3. PROVIDE ACCESSIBILITY FOR THE PHYSICALLY HANDICAPPED CONFORMING TO 2010 ADA STANDARDS, PARKING SPACES, CURB RAMPS, AND SYMBOLS.
4. ALL DIMENSIONS ARE TO BE FROM FACE OF MASONRY, FACE OF GYPSUM BOARD, OR COLUMN CENTER LINE.
5. ALL NOTES AND CALL OUTS FOR ONE SECTION OR DETAIL APPLY TO ALL OTHERS WHEN LIKE OR SIMILAR CONDITIONS ARE EVIDENT.
6. WOOD BLOCKING, PLYWOOD AND NAILERS IN CONTACT WITH CMU OR CONCRETE BUILDING COMPONENTS AND IN WALL TOPS SHALL BE PRESSURE TREATED.
7. WOOD COMPONENTS IN WALL TOPS SHALL BE COVERED WITH "ICE & WATER SHIELD" LAP AND SEAL 6" MINIMUM.
8. COPINGS, FLASHINGS, GRAVEL STOPS, GUTTERS, DOWN SPOUTS, ETC SHALL BE STAINLESS STEEL UNLESS NOTED OTHERWISE ON THE DRAWINGS.
9. PROVIDE CONTINUOUS BLOCKING IN ANY NON MASONRY WALLS THAT ARE TO RECEIVE SIGNAGE. COORDINATE LOCATIONS AND SIGNAGE REQUIREMENTS WITH OWNER.
10. G.C. TO INSTALL NEW SIGNS OR REINSTALL EXISTING/RELOCATED SIGNS TO NEWLY PLACED/REMODELED WALLS, DOORS, ETC.- COORDINATE WITH OWNER.
11. CONTRACTOR RESPONSIBLE FOR DISCONNECTING, MOVING, RESETTING & RECONNECTING FIXTURES/SHELVING/PLUMBING/ELECTRICAL/ETC. THAT HAVE BEEN RELOCATED AND/OR STORED FOR REMODELED FLOORS AND WALLS.
12. G.C TO CAULK CONTROL JOINTS AT ALL CHANGES IN MATERIALS.
13. CLEAN WALLS, DOORS, DOOR FRAMES, HANDRAILS, GUARDRAILS, ETC. PER PAINT MANUFACTURER'S RECOMMENDATIONS PRIOR TO SEALING AND PAINTING. INSTALL GUTTERS, DOWNSPOUTS, METER GROUPS, ETC. AFTER PAINTING.
14. ALL CMU WALLS BEHIND NEW SIDING SHALL BE TREATED WITH APPLIED DAMP-PROOFING, SEE SPECS.

FLOOR PLAN SYMBOL LEGEND

- A01 / A — BUILDING NUMBER; ROOM NAME; SUITE DESIGNATION
- X / AX.X — SECTION CUT INDICATOR
- X / AX.X — ENLARGED FLOOR PLAN
- X / AX.X — ELEVATION INDICATOR
- EXISTING WALL
- XXX — FLOOR FINISH - SEE INTERIOR FINISH LEGEND
- NEW OR RELOCATED FIXTURES/EQUIPMENT
- NEW INFILL SLAB
- NEW TOILET PARTITION

FLOOR PLAN KEYNOTES	
FP 1	PROVIDE AND INSTALL NEW PREFINISHED METAL GUTTERS AND DOWNSPOUTS.
FP 2	PROVIDE AND INSTALL NEW HARDIEPANEL VERTICAL SIDING AND HARDIETRIM AT FIRST AND SECOND FLOOR EXTERIOR WALLS AND CMU COLUMNS. PROVIDE AND INSTALL NEW HARDIEWRAP WEATHER BARRIER AT SECOND FLOOR.
FP 3	PROVIDE AND INSTALL NEW PAINT AT EXISTING EXTERIOR EXPOSED METAL, INCLUDING BUT NOT LIMITED TO: DOORS, DOOR FRAMES, LOUVERS, HANDRAILS, GUARDRAILS, STAIRS, BOLLARDS, EXPOSED ROOF TRUSSES AND COLUMNS, ETC.
FP 4	PROVIDE AND INSTALL NEW DOOR SWEEPS TO ALL EXTERIOR DOORS.
FP 5	PROVIDE AND INSTALL NEW FRP PANELS (WHERE CMU NOT EXISTING) WITHIN THE CONCESSIONS AREA.
FP 6	PROVIDE AND INSTALL NEW PAINT AT EXISTING INTERIOR EXPOSED CMU WALLS.
FP 7	PROVIDE AND INSTALL NEW PAINT AT EXISTING WOOD PANELING CEILINGS.
FP 8	PROVIDE NEW POLISH AT EXISTING CONCESSIONS AREA CONCRETE FLOORS.
FP 9	PROVIDE AND INSTALL NEW EPOXY (AND POLYURETHANE) FINISH AT EXISTING RESTROOMS CONCRETE FLOORS.
FP 10	PROVIDE AND INSTALL NEW LVT WOOD PLANK FLOORING AND RESILIENT WALL BASE AT SECOND FLOOR.
FP 11	PROVIDE AND INSTALL NEW RESTROOM FIXTURES, FAUCETS, FLUSH VALVES AND WATER CLOSETS. COORDINATE WITH PLUMBING DRAWINGS.
FP 12	PROVIDE AND INSTALL NEW TOILET PARTITIONS.
FP 13	NEW WATER HEATER. COORDINATE WITH PLUMBING AND ELECTRICAL DRAWINGS
FP 14	NEW WATER COOLER. COORDINATE WITH PLUMBING DRAWINGS.
FP 15	[BUILDING C ONLY] REMOVE ALL EXISTING MILLWORK (INCLUDING COUNTERS, COUNTERTOPS AND SHELVING). EXISTING PASS-THRU SCREEN AND GRILLE TO REMAIN.
FP 16	INFILL AREAS WHERE SLAB WAS REMOVED WITH GRAY SEALED CONCRETE. MATCH NEW FLOOR FINISHES. MATCH EXISTING CONTROL JOINTS AND SLOPES WHERE NECESSARY.
FP 17	PATCH AND REPAIR EXISTING WINDOW SCREENS (PLEXIGLASS) AT CONCESSIONS SERVICE COUNTER AS NEEDED.
FP 18	PROVIDE AND INSTALL NEW VENTED HARDIESOFFIT PANELS.
FP 19	PROVIDE AND INSTALL NEW HARDIETRIM FASCIA.
FP 20	PROVIDE AND INSTALL NEW PAINT AT PORTIONS OF EXTERIOR EXPOSED CMU.
FP 21	PROVIDE AND INSTALL NEW PAINT AT EXTERIOR EXPOSED WOOD (INCLUDING COLUMNS, BEAMS, ETC.).
FP 22	PROVIDE AND INSTALL NEW PAINT AT INTERIOR HOLLOW METAL DOORS AND FRAMES.
FP 23	PROVIDE AND INSTALL NEW PAINT AT EXISTING PAINTED SHELVING IN CONCESSIONS AREA.
FP 24	CONTRACTOR RESPONSIBLE FOR RESETTING, RECONNECTING AND FINAL HOOK-UP OF FIXTURES, COUNTER TOPS, PLUMBING, ELECTRICAL, MECHANICAL EQUIPMENT, ETC. THAT WERE BE REMOVED AND STORED.
FP 25	ALTERNATE #1: REMOVE AND REPLACE EXISTING MILLWORK (INCLUDING COUNTERS, COUNTERTOPS AND SHELVING) AND PASS-TRHU SCREEN.
FP 26	ALTERNATE #2: EXISTING CONCESSIONS EQUIPMENT AND FIXTURES TO BE ABANDONED IN PLACE.
FP 27	ALTERNATE #3: [SCOREKEEPER TOWER ONLY] PROVIDE AND INSTALL NEW HARDIEPANEL VERTICAL SIDING AND HARDIE TRIM AT SECOND FLOOR EXTERIOR WALLS. PROVIDE AND INSTALL NEW PAINT AT ENTIRE HEIGHT OF EXISTING FIRST FLOOR CMU WALLS.

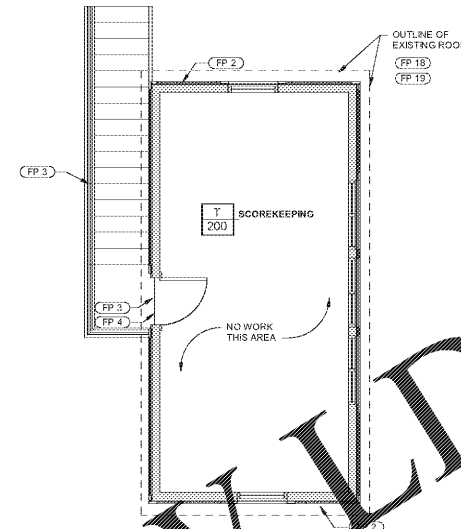

4 / A1.4 SECOND FLOOR PLAN
1/4" = 1'-0"

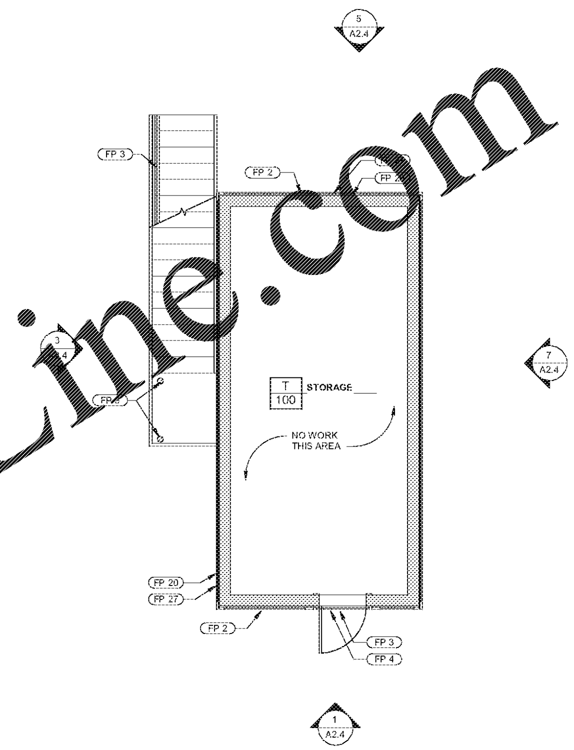

3 / A1.4 FIRST FLOOR PLAN
1/4" = 1'-0"

DEMOLITION GENERAL NOTES

GENERAL NOTES

1. REFER TO CONSTRUCTION DRAWINGS TO VERIFY CONDITIONS REQUIRING DEMOLITION, REMOVAL, SALVAGE OR RELOCATION PRIOR TO STARTING OF WORK. AREAS SHOWN TO BE REMOVED ARE APPROXIMATE ONLY. CONTRACTOR IS RESPONSIBLE FOR ALL DEMOLITION, REMOVAL OR RELOCATION WITHIN THE GENERAL LIMITS DESCRIBED IN THE CONSTRUCTION DOCUMENT DRAWINGS.
2. CONTRACTOR SHALL VERIFY INFORMATION SHOWN AS EXISTING AND REPORT ANY DISCREPANCIES TO ARCHITECT.
3. PRIOR TO DEMOLITION NOTIFY THE OWNER IN SUFFICIENT TIME TO SALVAGE MISCELLANEOUS ITEMS BEFORE DEMOLITION WORK COMMENCES.
4. FOR ALL AREAS/ITEMS SCHEDULED TO REMAIN, TAKE ALL NECESSARY MEASURES TO PROTECT EXISTING STRUCTURES/FIXTURES/EQUIPMENT DURING DEMOLITION AND THROUGHOUT CONSTRUCTION.
5. COORDINATE WITH OWNER TO DISCONNECT UTILITIES PRIOR TO COMMENCING WORK.
6. WHERE FLOORING IS SCHEDULED TO BE DEMOLISHED, IF APPLICABLE, REMOVE ALL ADHESIVE AND PROVIDE A SMOOTH AND LEVEL CONCRETE SUBSTRATE READY TO RECEIVE NEW FLOOR FINISH
7. WHERE WALL BASE IS SCHEDULED TO BE DEMOLISHED, REMOVE ALL ADHESIVE FROM WALL AND PROVIDE A SMOOTH SURFACE READY TO RECEIVE NEW WALL BASE.
8. WHERE EXISTING ELECTRICAL, MECHANICAL, PLUMBING, ARCHITECTURAL FIXTURES AND EQUIPMENT ARE INDICATED TO REMAIN/BE RELOCATED. CONFIRM THAT EQUIPMENT IS IN GOOD WORKING ORDER AND MEETS CURRENT CODES. NOTIFY ARCHITECT IF EXISTING ITEMS SCHEDULED TO REMAIN WILL BE REQUIRED TO BE REPLACED TO COMPLY WITH CURRENT CODES OR TO FUNCTION AS EXPECTED. PROTECT ITEMS FROM DAMAGE DURING CONSTRUCTION. COORDINATE REMOVAL, STORAGE, STAGING AND RE-INSTALLATION WITH OWNER AS REQUIRED.
9. REFER TO PLUMBING, MECHANICAL AND ELECTRICAL FOR PLUMBING, MECHANICAL AND ELECTRICAL DEMOLITION NOTES RESPECTIVELY.
10. CONTRACTOR TO LEGALLY DISPOSE ALL DEMOLISHED MATERIALS OFF-SITE UNLESS INDICATED TO BE REMOVED AND SALVAGED.
11. CONTRACTOR SHALL REMOVE IDENTIFICATION, REGULATORY AND INFORMATIONAL WALL SIGNS TO THE EXTERIOR OF THE BUILDINGS. SAVE SIGNS TO BE REUSED OR DISPOSED AS DIRECTED BY OWNER.
12. CONTRACTOR SHALL ENSURE THAT ALL EXISTING WINDOWS AND DOORS TO REMAIN ARE OPERATIONAL AND IN GOOD CONDITION.
13. CONTRACTOR TO CLEAN/WASH ALL EXTERIOR SURFACES AND WINDOWS FREE OF DUST, COBWEBS AND MISCELLANEOUS STAINS IN AREAS WHERE NO OTHER WORK IS REQUIRED.

DEMOLITION PLAN SYMBOL LEGEND

- EXISTING WALL TO REMAIN
- EXISTING CONSTRUCTION TO BE REMOVED
- EXISTING FIXTURE/EQUIPMENT TO BE REMOVED
- EXISTING SLAB TO BE REMOVED

DEMOLITION FLOOR PLAN KEYNOTES	
DP 1	REMOVE EXISTING GUTTERS AND DOWNSPOUTS FOR REPLACEMENT.
DP 2	REMOVE EXISTING EXTERIOR VINYL SIDING (AND WEATHER BARRIER BENEATH) AT SECOND FLOOR AND GABLES. PATCH AND REPAIR WALLS (INCLUDING FIRST FLOOR CMU WALLS) AS REQUIRED TO RECEIVE NEW HARDIEPANEL SIDING.
DP 3	EXISTING CMU COLUMNS TO REMAIN. PATCH AND REPAIR AS NEEDED TO ALLOW FOR INSTALLATION OF NEW HARDIEPANEL SIDING.
DP 4	REMOVE EXISTING WALL COVERING WITHIN CONCESSIONS AREA. PATCH AND REPAIR WALLS AS NEEDED TO ALLOW FOR INSTALLATION OF NEW FRP FINISHES.
DP 5	REMOVE EXISTING VCT FLOORING AND WALL BASE AT SECOND FLOOR. PATCH AND REPAIR FLOORS AS NEEDED TO ALLOW FOR INSTALLATION OF NEW LVT FLOORING.
DP 6	PREPARE EXISTING FLOORS AT CONCESSIONS AREA AS REQUIRED FOR STAIN AND POLISH (AFTER EQUIPMENT AND FIXTURES REMOVAL).
DP 7	DEEP CLEAN EXISTING INTERIOR EXPOSED CMU WALLS. PREPARE TO RECEIVE NEW PAINT.
DP 8	SAND, PRIME AND PREPARE EXTERIOR EXPOSED METAL, INCLUDING DOORS, DOOR FRAMES, LOUVERS, HANDRAILS, GUARDRAILS, STAIRS, STAIR LANDINGS, BOLLARDS, COLUMNS, ETC., TO RECEIVE NEW PAINT.
DP 9	REMOVE EXISTING MECHANICAL, PLUMBING AND ELECTRICAL FIXTURES, FAUCETS, FLUSH VALVES, HAND DRYERS, TOILET PARTITIONS, RESTROOM ACCESSORIES, ETC. PATCH AND REPAIR SURFACES TO RECEIVE NEW FIXTURES, PARTITIONS AND ACCESSORIES. COORDINATE WITH MECHANICAL, PLUMBING AND ELECTRICAL DRAWINGS.
DP 10	DEEP CLEAN EXISTING WOOD PANEL CEILINGS AS NEEDED. PREPARE TO RECEIVE NEW PAINT.
DP 11	REMOVE EXISTING WATER HEATER FOR REPLACEMENT. COORDINATE WITH PLUMBING AND ELECTRICAL DRAWINGS. REMOVE EXISTING WATER HEATER SCREEN (TO BE REINSTALLED AFTER WORK COMPLETE).
DP 12	CLEAN AND UNCLOG ALL EXISTING DRAINS.
DP 13	REMOVE PORTION OF EXISTING SLAB AS NEEDED TO ALLOW FOR INSTALLATION OF NEW WATER CLOSET. FIELD VERIFY EXACT LOCATIONS. COORDINATE WITH PLUMBING DRAWINGS.
DP 14	REMOVE EXISTING WATER COOLER FOR REPLACEMENT. COORDINATE WITH PLUBING DRAWINGS.
DP 15	CLEAN/WASH ALL EXISTING SURFACES (FLOORS, WALLS, CEILINGS, ETC.) AND WINDOWS FREE OF DUST, COBWEBS AND MISCELLANEOUS STAINS IN AREAS WHERE NO OTHER WORK IS REQUIRED.
DP 16	CONTRACTOR RESPONSIBLE FOR DISCONNECTING AND MOVING FIXTURES, COUNTER TOPS, PLUMBING, ELECTRICAL, MECHANICAL EQUIPMENT, ETC. THAT NEED TO BE REMOVED AND STORED FOR CONSTRUCTION. COORDINATE WITH OWNER REGARDING STORAGE.
DP 17	REMOVE EXISTING FRYER, HOOD AND ALL ASSOCIATED ELECTRICAL EQUIPMENT. PATCH AND REPAIR ROOF, WALLS AND CEILING AS REQUIRED AFTER EQUIPMENT DEMOLITION. PREPARE SURFACES TO RECEIVE NEW FINISHES.
DP 18	REMOVE EXISTING FASCIA FOR REPLACEMENT. PATCH AND REPAIR AREA AS REQUIRED TO RECEIVE NEW HARDIETRIM FASCIA.
DP 19	REMOVE EXISTING MECHANICAL, ELECTRICAL AND/OR PLUMBING EQUIPMENT. COORDINATE WITH MECHANICAL, PLUMBING AND ELECTRICAL DRAWINGS.
DP 20	REMOVE EXISTING VINYL SOFFITS. PATCH AND REPAIR AREA AS REQUIRED TO RECIEVE NEW HARDIESOFFIT PANELS.
DP 21	DEEP CLEAN EXISTING TILE FLOORS AT RESTROOMS.
DP 22	CLEAN, REPAIR AND PREPARE CONCRETE FLOORS AT RESTROOMS AS REQUIRED TO RECEIVE NEW EPOXY FINISH.
DP 23	DEEP CLEAN EXISTING EXTERIOR CMU WALLS AT AREAS THAT WILL BE EXPOSED AFTER NEW SIDING INSTALLED. PREPARE TO RECEIVE NEW PAINT.
DP 24	SAND AND PREPARE INTERIOR HOLLOW METAL DOORS AND FRAMES TO RECEIVE NEW PAINT. EXISTING DOOR HARDWARE TO REMAIN.
DP 25	PREPARE EXISTING PAINTED SHELVING WITHIN CONCESSIONS AREA TO RECEIVE NEW PAINT.

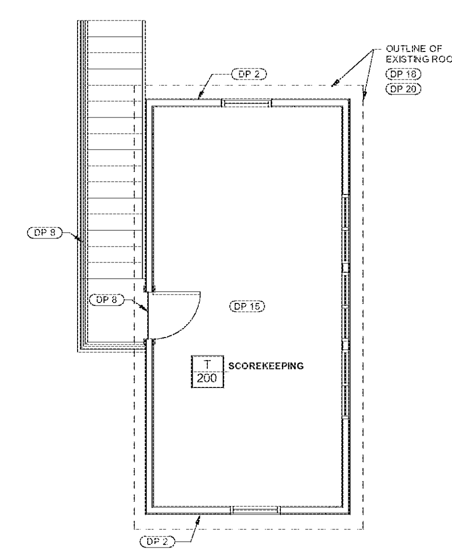

2 / A1.4 DEMOLITION SECOND FLOOR PLAN
1/4" = 1'-0"

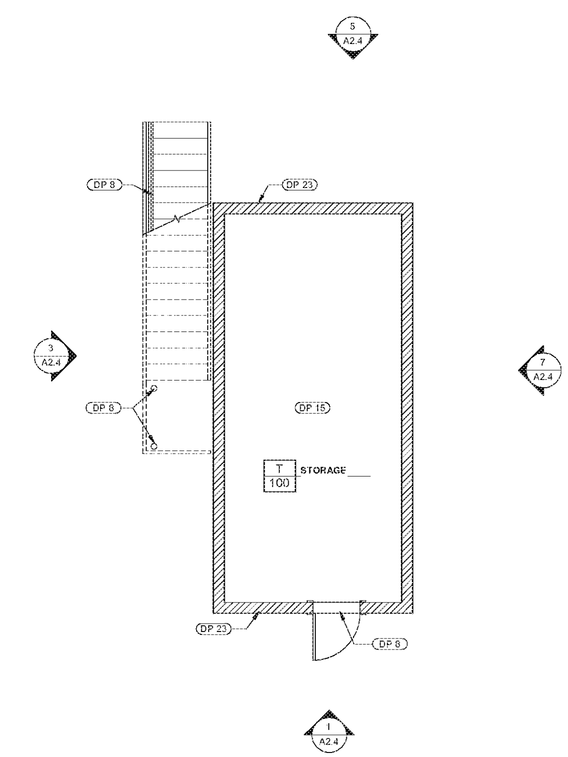

1 / A1.4 DEMOLITION FIRST FLOOR PLAN
1/4" = 1'-0"

ROBERTSON LOIA ROOF
ARCHITECTS & ENGINEERS
3460 Preston Ridge Road . Suite 275 . Alpharetta, GA. 30005
770.674.2600 / www.rlrpc.com
FIRM LICENSE NUMBER: C-0738

STATE OF GEORGIA
CHRISTIAN J. CASTIN
CERTIFICATE NO. 010360
REGISTERED ARCHITECT
08/17/2020

Sawnee Mountain Park Renovations
3995 WATSON ROAD
CUMMING, GA 30028
FOR:
Forsyth Co. Parks & Rec. Dept.
P.O. BOX 2417
CUMMING, GA 30028

REVISIONS

SHEET TITLE
DEMO AND PROPOSED FLOOR PLANS - SCOREKEEPER TOWER

DATE
08/04/2020

PROJECT NUMBER
19323

SHEET NUMBER
A1.4

Order Plans @ WWW.LDIILine.com