2010 ADA STANDARDS FOR ACCESSIBILITY DESIGN

NOTE:
COMPLETE COMPLIANCE WITH ALL ASPECTS OF 2010 ADA STANDARDS FOR ACCESSIBLE DESIGN IS REQUIRED.

ACCESSIBLE STAIRWAYS REQUIREMENTS

1. ACCESSIBLE STAIRS SHALL COMPLY WITH A.D.A.A.G. SECTION **504** AND ANY OTHER APPLICABLE SECTION OF CHAPTER 5.

2. ALL STEPS ON A FLIGHT OF STAIRS SHALL HAVE UNIFORM RISER HEIGHTS AND UNIFORM TREAD DEPTHS ALONG EACH RUN. RISERS SHALL BE 4" HIGH MIN. AND 7" HIGH MAX. TREADS SHALL BE 11" DEEP MIN.

3. STAIRWAYS SHALL HAVE HANDRAILS AT BOTH SIDES OF ALL STAIRS IN COMPLIANCE WITH SECTION **505**. HANDRAILS SHOULD BE CONTINUOUS ALONG BOTH SIDES OF STAIRS. THE INSIDE HANDRAIL ON SWITCHBACK OR DOGLEG STAIRS SHALL ALWAYS BE CONTINUOUS. HANDRAILS THAT ARE NOT CONTINUOUS SHALL EXTEND HORIZONTALLY ABOVE THE LANDING AT THE TOP AND BOTTOM OF A STAIR FLIGHT. ALL EXTENSIONS SHALL RETURN TO A WALL, GUARD OR THE LANDING SURFACE.

4. THE CLEAR SPACE BETWEEN HANDRAILS AND WALL BE 1 1/2" MIN. THE TOP OF HANDRAIL GRIPPING SURFACES SHALL BE INSTALLED BETWEEN 34" AND 38" ABOVE STAIR NOSINGS.

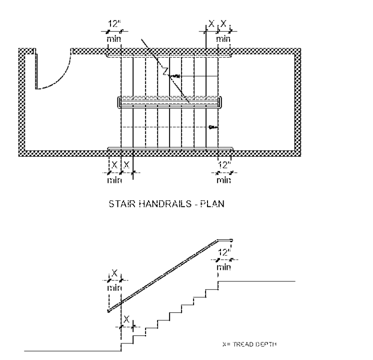

STAIR HANDRAILS - PLAN

STAIR HANDRAILS - ELEVATION

ACCESSIBLE RAMP REQUIREMENTS

1. ACCESSIBLE RAMPS SHALL COMPLY WITH A.D.A.A.G. SECTION **405** AND ANY OTHER APPLICABLE SECTION OF CHAPTER 4.

2. THE RISE FOR ANY RAMP RUN SHALL BE 30" MAXIMUM. IF A RAMP HAS A RISE GREATER THAN 6" OR A HORIZONTAL PROJECTION GREATER THAN 72", THEN IT SHALL HAVE HANDRAILS ON BOTH SIDES COMPLYING WITH SECTION **505**. HANDRAILS ARE NOT REQUIRED ADJACENT TO ASSEMBLY SEATING AREAS. CLEAR SPACE BETWEEN HANDRAILS SHALL BE 36" MINIMUM AND BETWEEN HANDRAIL AND ADJACENT WALL SHALL BE 1 1/2" MIN.

3. A SLOPE STEEPER THAN 1:8 IS PROHIBITED.

4. RAMPS SHALL HAVE LANDINGS AT THE TOP AND THE BOTTOM OF EACH RAMP RUN. THE LANDING CLEAR WIDTH SHALL BE AT LEAST AS WIDE AS THE WIDEST RAMP RUN LEADING TO IT. THE LANDING CLEAR LENGTH SHALL BE 60" LONG MINIMUM.

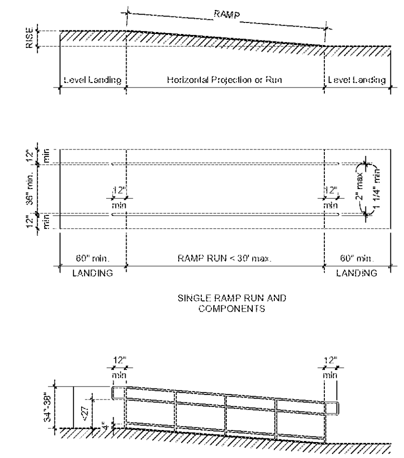

SINGLE RAMP RUN AND COMPONENTS

HANDRAIL EXAMPLE WITH EXTENSIONS

SLOPE	MAXIMUM RISE in mm		MAXIMUM HORIZONTAL PROJECTION ft m	
1:12 TO < 1:16	30	760	30	9
1:16 TO < 1:20	30	760	40	12

ACCESSIBLE DOORS REQUIREMENTS

1. ACCESSIBLE DOORS, DOORWAYS AND GATES SHALL COMPLY WITH A.D.A.A.G SECTION **404** AND ANY OTHER APPLICABLE SECTION OF CHAPTER 4.

2. THRESHOLD, IF PROVIDED AT DOORWAYS, SHALL BE 1/2" HIGH MAXIMUM. EXISTING OR ALTERED THRESHOLDS 3/4" HIGH MAXIMUM THAT HAVE A BEVELED EDGE ON EACH SIDE WITH ASLOPE NOT STEEPER THAN1:2 ARE ALSO PERMITTED.

3. THE DISTANCE BETWEEN TWO HINGED OR PIVOTED DOORS IN SERIES AND GATES IN SERIES SHALL BE 48" MINIMUM PLUS THE WIDTH OF DOORS OR GATES SWINGING INTO THE SPACE.

4. DOORS AND GATE HARDWARE HANDLES, PULLS, LATCHES, LOCKS AND OTHER PORTABLE PARTS ON DOORS AND GATES SHALL COMPLY WITH **309.4** OPERABLE PARTS OF SUCH HARDWARE SHALL BE 34" MINIMUM AND 48" MAXIMUM ABOVE THE FINISH FLOOR OR GROUND. WHERE SLIDING DOORS ARE IN THE FULLY OPEN POSITION, OPERATING HARDWARE SHALL BE EXPOSED AND USABLE FROM BOTH SIDES.

5. a) DOOR CLOSERS AND GATE CLOSERS. DOOR CLOSERS AND GATE CLOSERS SHALL BE ADJUSTED SO THAT FROM AN OPEN POSITION ON 90 DEGREES, THE TIME REQUIRED TO MOVE THE DOOR TO A POSITION ON 12 DEGREES FROM THE LATCH IS 5 SECONDS MINIMUM.

b) SPRING HINGE: DOOR AND GATE SPRING HINGES SHALL BE ADJUSTED SO THAT FROM THE OPEN POSITION ON 70 DEGREES, THE DOOR OR GATE SHALL MOVE TO THE CLOSED POSITION IN 1.5 SECONDS MINIMUM.

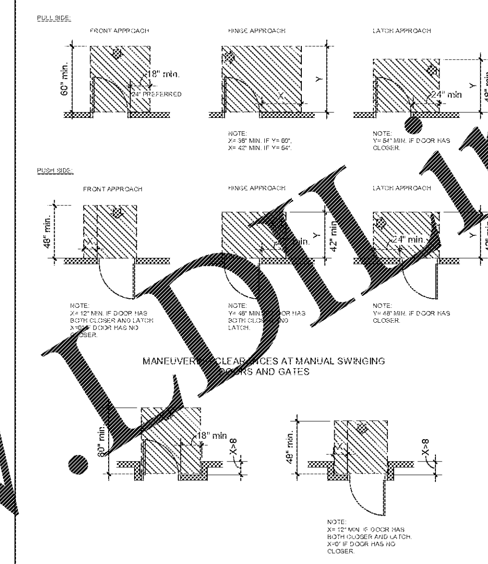

MANEUVERING CLEARANCES AT MANUAL SWINGING DOORS AND GATES

MANEUVERING CLEARANCES AT RECESSED DOORS AND GATES

REACH RANGES

1. REACH RANGES FOR CHILDREN UNDER AGES 12 SHALL COMPLY WITH A.D.A.A.G. SECTION **308.1**.

2. CONTROLS AND OPERABLE PARTS SHALL COMPLY WITH SECTION **309**: COMPLIANT CLEAR FLOOR SPACES AND REACH RANGES SHALL BE PROVIDED. OPERABLE PARTS SHALL BE OPERABLE WITH ONE HAND AND SHALL NOT REQUIRE TIGHT GRASPING, PINCHING, OR TWISTING OF THE WRIST. THE FORCE REQUIRED TO ACTIVATE OPERABLE PARTS SHALL BE 5 POUNDS MAXIMUM.

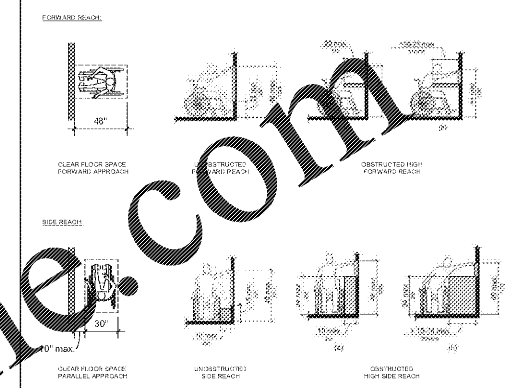

REACH RANGES

MANEUVERING CLEARANCE IN ALCOVES

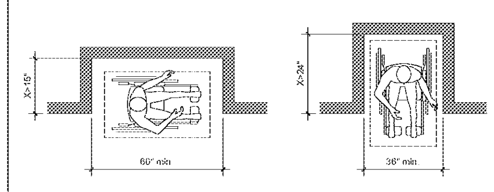

PARALLEL APPROACH

FORWARD APPROACH

KNEE AND TOE CLEARANCE

1. WHERE SPACE BENEATH AN ELEMENT IS INCLUDED AS PART OF CLEAR FLOOR OR GROUND SPACE OR TURNING SPACE, THE SPACE SHALL COMPLY WITH SECTION **306**. ADDITIONAL SPACE SHALL NOT BE PROHIBITED BENEATH AN ELEMENT BUT SHALL NOT BE CONSIDERED AS PART OF THE CLEAR FLOOR OR GROUND SPACE OR TURNING SPACE.

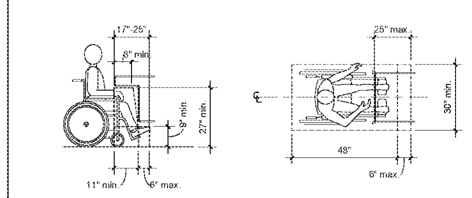

ELEVATION

PLAN

CLEAR FLOOR OR GROUND SPACE

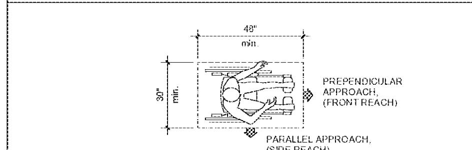

STANDARD CLEAR FLOOR SPACE

TURNING SPACE

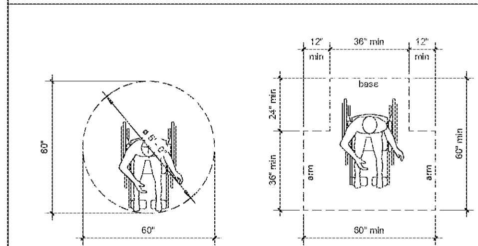

CIRCULAR SPACE

T-SHAPED SPACE

ACCESSIBLE ROUTE REQUIREMENTS

1. ALL WALKS, HALLS, CORRIDORS, AISLES, SKYWALKS, TUNNELS, AND OTHER SPACES THAT ARE PART OF AN ACCESSIBLE ROUTE SHALL COMPLY WITH A.D.A.A.G. SECTION **402** AND ANY OTHER APPLICABLE SECTION OF CHAPTER 4.

2. AT LEAST ONE ACCESSIBLE ROUTE SHALL CONNECT ACCESSIBLE BUILDING OR FACILITY ENTRANCES WITH ALL ACCESSIBLE SPACES AND ELEMENTS.

3. AN ACCESSIBLE ROUT WITH A RUNNING SLOPE GREATER THAN 1:20 IS A RAMP AND SHALL COMPLY WITH SECTION **405**. NOWHERE SHALL THE CROSS SLOPE OF AN ACCESSIBLE ROUTE EXCEED 1:48.

4. CHANGES IN LEVEL FOR AN ACCESSIBLE ROUT SHALL COMPLY WITH SECTION **303**. CHANGES IN LEVEL GREATER THAN 1/2" HIGH SHALL BE RAMPED.

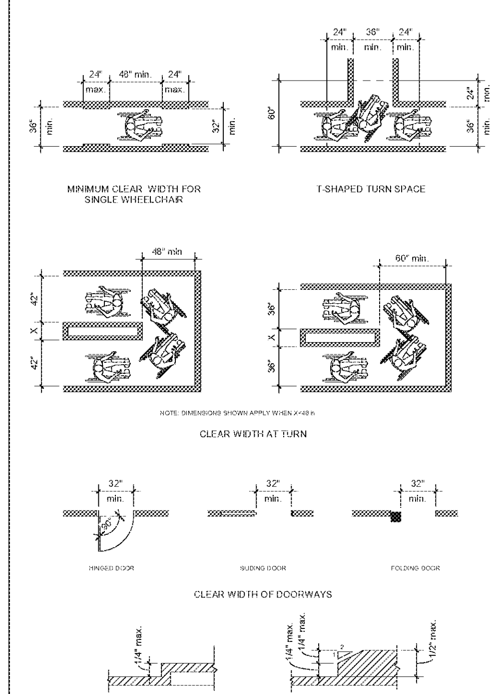

MINIMUM CLEAR WIDTH FOR SINGLE WHEELCHAIR

T-SHAPED TURN SPACE

CLEAR WIDTH AT TURN

CLEAR WIDTH OF DOORWAYS

CHANGES IN LEVEL

RECOMMENDED ADA MOUNTING HEIGHTS FOR RESTROOM FIXTURES AND ACCESSORIES

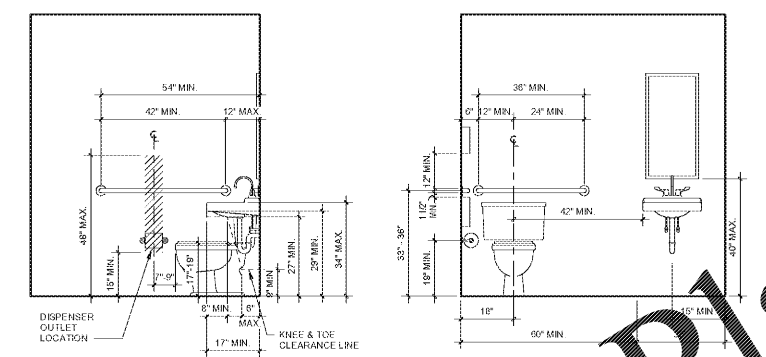

ACCESSIBLE TOILET COMPARTMENT

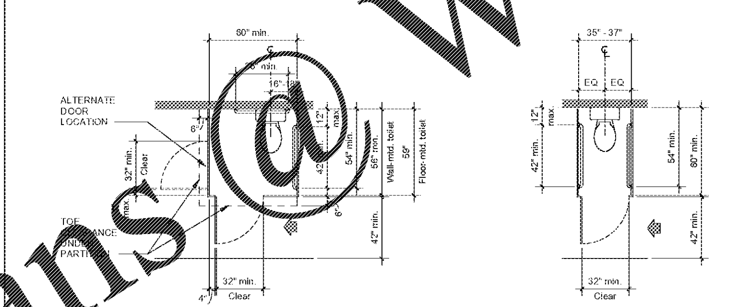

WHEELCHAIR ACCESSIBLE TOILET COMPARTMENT

AMBULATORY ACCESSIBLE TOILET COMPARTMENT

INDIVIDUAL ACCESSIBLE TOILET ROOM FLOOR PLAN

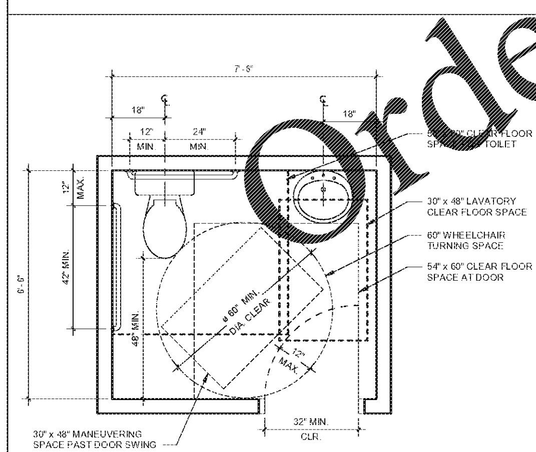

UPPER/LOWER REACH RANGES AND MOUNTING HEIGHTS FOR RESTROOMS ACCESORIES & FIXTURES WITH OPERABLE PARTS

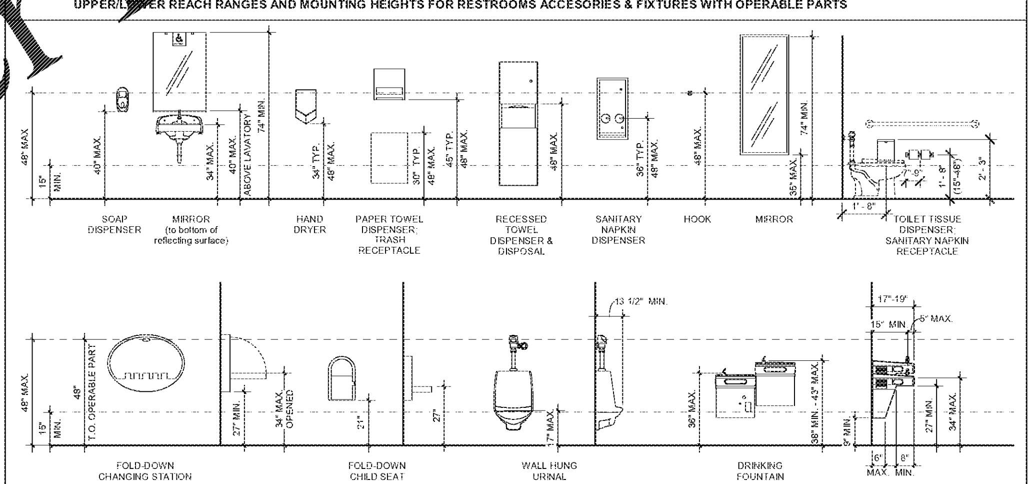

Order Plans@ WWW.LDILine.com

ROBERTSON LOIA ROOF
ARCHITECTS & ENGINEERS
3460 Preston Ridge Road . Suite 275 . Alpharetta, GA. 30005
770.674.2600 / www.rlrpc.com
FIRM LICENSE NUMBER: C-0738

STATE OF GEORGIA
CHRISTIAN J. CASTIN
CERTIFICATE NO. 010560
REGISTERED ARCHITECT
08/12/2020

Sawnee Mountain Park Renovations
3995 WATSON ROAD
CUMMING, GA 30028

FOR:
Forsyth Co. Parks & Rec. Dept.
P.O. BOX 2417
CUMMING, GA 30028

REVISIONS

SHEET TITLE
ACCESSIBILITY REQUIREMENTS

DATE
08/04/2020

PROJECT NUMBER
19323

SHEET NUMBER
A0.2