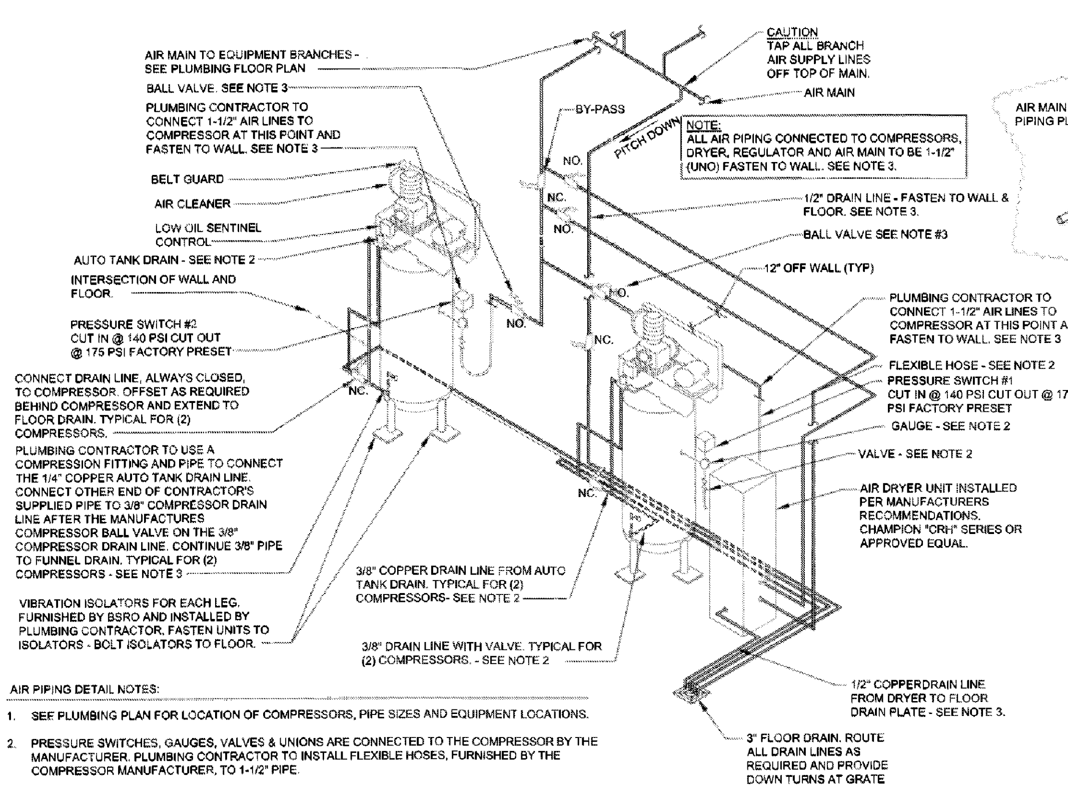

AIR PIPING DETAIL NOTES:

1. SEE PLUMBING PLAN FOR LOCATION OF COMPRESSORS, PIPE SIZES AND EQUIPMENT LOCATIONS.
2. PRESSURE SWITCHES, GAUGES, VALVES & UNIONS ARE CONNECTED TO THE COMPRESSOR BY THE MANUFACTURER. PLUMBING CONTRACTOR TO INSTALL FLEXIBLE HOSES, FURNISHED BY THE COMPRESSOR MANUFACTURER, TO 1-1/2" PIPE.
3. SEE SPECIFICATIONS FOR TYPE OF PIPE, VALVES, UNIONS & CHECK VALVES FURNISHED & INSTALLED BY PLUMBING CONTRACTOR
4. TYPICAL DETAIL - PIPING CONNECTIONS AT COMPRESSORS MAY VARY ACCORDING TO MANUFACTURER. COMPRESSORS ARE TO BE FURNISHED BY BSRO AND INSTALLED BY CONTRACTOR.
5. COMPRESSORS TO BE INSTALLED PER MANUFACTURER'S INSTRUCTIONS.
6. DRYER TO BE INSTALLED PER MANUFACTURER'S INSTRUCTIONS.
7. ALL PIPING IS LOCATED / INSTALLED BETWEEN COMPRESSORS AND WALL. MOUNT TIGHT TO WALL.
8. ALL VALVES SHALL BE NORMALLY OPEN (NO.) UNLESS NOTED OTHERWISE.

3 / P3 AIR PIPING DETAIL - TWO VERTICAL COMPRESSORS

SCALE: N.T.S.

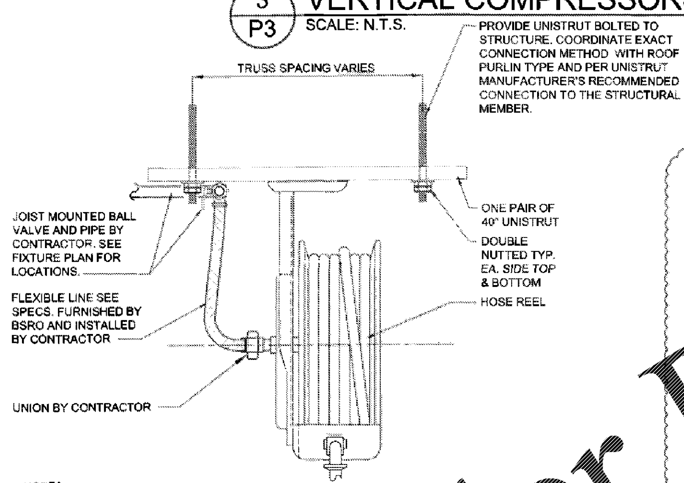

NOTES:

1. ALL REELS ARE FURNISHED BY BSRO AND INSTALLED BY CONTRACTOR.
2. ALL REEL SUPPORTS ARE FURNISHED AND INSTALLED BY CONTRACTOR.
3. 2 PIECE 40" LONG UNISTRUT TO BE MOUNTED ON THE BOTTOM OF THE STRUCTURAL MEMBER AND SECURED WITH ALL-THREAD AND BOLTS. UNISTRUT SHALL BE CENTERED WITH PILASTER BETWEEN OVERHEAD DOORS. REFER TO SHEET A2 FOR LOCATIONS.
4. FOUR PIECES OF ALL-THREAD EXTENDED BEYOND THE BOTTOM OF THE STRUCTURAL MEMBER FOR ATTACHMENT OF TWO 40" LONG PIECES OF UNISTRUT. EACH END OF THE ALL-THREAD TO BE DOUBLE NUTTED TYPICAL.
5. UNISTRUT TO BE INSTALLED WITH THE OPEN PORTION OF THE CHANNEL FACING THE SERVICE BAY FLOOR.
6. WHERE AIR REEL OCCURS AT A MAIN BEAM LINE, MOUNT UNI-STRUT TO BOTTOM OF MAIN ROOF BEAM. SUPPORT UNISTRUT AT EACH END WITH ALL THREAD BACK UP TO A UNISTRUT MOUNTED AT THE BOTTOM OF THE ROOF PURLIN. PROVIDE ALL SECONDARY UNISTRUT AS NECESSARY TO ATTACHED UNISTRUT AS SHOWN.

2 / P3 PRE-ENGINEERED BUILDING AIR HOSE REEL DETAIL

SCALE: N.T.S.

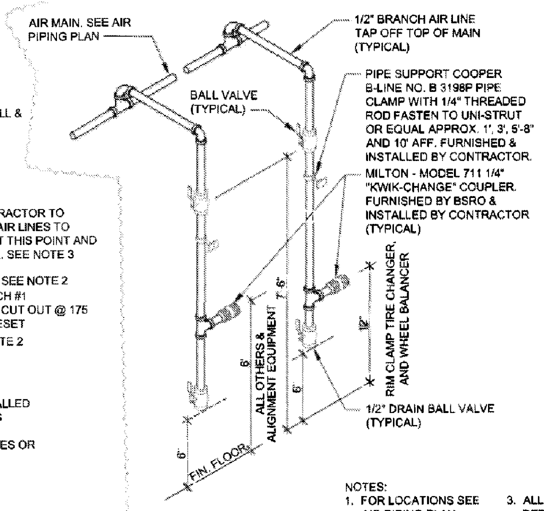

NOTES:

1. FOR LOCATIONS SEE AIR PIPING PLAN.
2. SEE SPECIFICATIONS FOR TYPE OF PIPE & VALVES TO BE INSTALLED FOR THIS DETAIL.
3. ALL MATERIAL FOR THIS DETAIL SHALL BE FURNISHED & INSTALLED BY CONTRACTOR UNLESS OTHERWISE NOTED.

4 / P3 AIR SUPPLY DETAIL

SCALE: N.T.S.

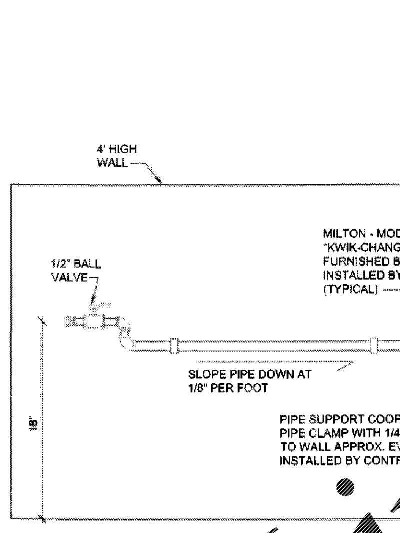

5 / P3 AIR SUPPLY DETAIL

SCALE: N.T.S.

KEYED PLAN NOTES

1. FLAT REPAIR STATION 1/2" PIPE TO OVERHEAD AIR HOSE REEL. SEE DETAIL ON THIS SHEET FOR MOUNTING. COORDINATE EXACT LOCATION WITH FIXTURE PLAN.
2. 1/2" PIPE TO OVERHEAD AIR HOSE REEL. SEE DETAIL ON THIS SHEET FOR MOUNTING. COORDINATE EXACT LOCATION WITH FIXTURE PLAN.
3. 1/2" PIPE DOWN TO ALIGNMENT RACK. MAKE FINAL HARD PIPE CONNECTION TO ALIGNMENT CONTROLLER BOX. COORDINATE EXACT LOCATION WITH FIXTURE PLAN. REFER TO AIR SUPPLY DETAIL THIS SHEET FOR MOUNTING HEIGHT.
4. 1/2" PIPE DROP FOR RIM CLAMP TIRE CHANGER. COORDINATE EXACT LOCATION WITH FIXTURE PLAN. REFER TO AIR SUPPLY DETAIL ON THIS SHEET FOR MOUNTING HEIGHT.
5. 1/2" PIPE DROP FOR TANK MOUNTED AIR POWERED OIL PUMP. REFER TO AIR SUPPLY DETAIL THIS SHEET FOR MOUNTING HEIGHT. COORDINATE LOCATION OF AIR DROP WITH FIXTURE PLAN AND USED OIL STORAGE SYSTEM DETAIL ON SHEET P4.
6. 1/2" PIPE DOWN TO SERVICE BENCH. COORDINATE EXACT LOCATION WITH FIXTURE PLAN. REFER TO AIR SUPPLY DETAIL ON THIS SHEET FOR MOUNTING HEIGHT.
7. 1/2" PIPE DOWN TO ELECTRONIC WHEEL BALANCER. COORDINATE EXACT LOCATION WITH FIXTURE PLAN. REFER TO AIR SUPPLY DETAIL ON THIS SHEET FOR MOUNTING HEIGHT. ROUTE FLEXIBLE HOSE FROM UNISTRUT TO EQUIPMENT CONNECTION POINT. PROVIDE UNION FITTING PRIOR TO CONNECTING TO EQUIPMENT. COORDINATE WITH BSRO FOR FUTURE LOCATION OF AIR POWERED WHEEL BALANCER AND ELECTRONIC WHEEL BALANCER.
8. 1/2" PIPE TO OVERHEAD AIR HOSE REEL. SEE DETAIL ON THIS SHEET FOR MOUNTING. COORDINATE EXACT LOCATION WITH FIXTURE PLAN.
9. DROP 1" PIPE DOWN ALONG OUTSIDE FACE OF WALL. PROVIDE DIRT LEG AND SHUT OFF ON BOTTOM OF LINE. ROUTE HORIZONTALLY OVER TO EQUIPMENT CONNECTION POINT. SLOPE HORIZONTAL PIPING BACK TO MAIN DROP. SEE DETAIL 5 THIS SHEET.
10. 1/2" PIPE CONNECTION FOR RIM CLAMP TIRE CHANGER. COORDINATE EXACT LOCATION WITH FIXTURE PLAN. REFER TO AIR SUPPLY DETAIL 5 ON THIS SHEET FOR MOUNTING HEIGHT.
11. 1/2" PIPE CONNECTION TO ELECTRONIC WHEEL BALANCER. COORDINATE EXACT LOCATION WITH FIXTURE PLAN. REFER TO AIR SUPPLY DETAIL 5 ON THIS SHEET FOR MOUNTING HEIGHT. COORDINATE WITH BSRO FOR FUTURE LOCATION OF AIR POWERED WHEEL BALANCER AND ELECTRONIC WHEEL BALANCER.

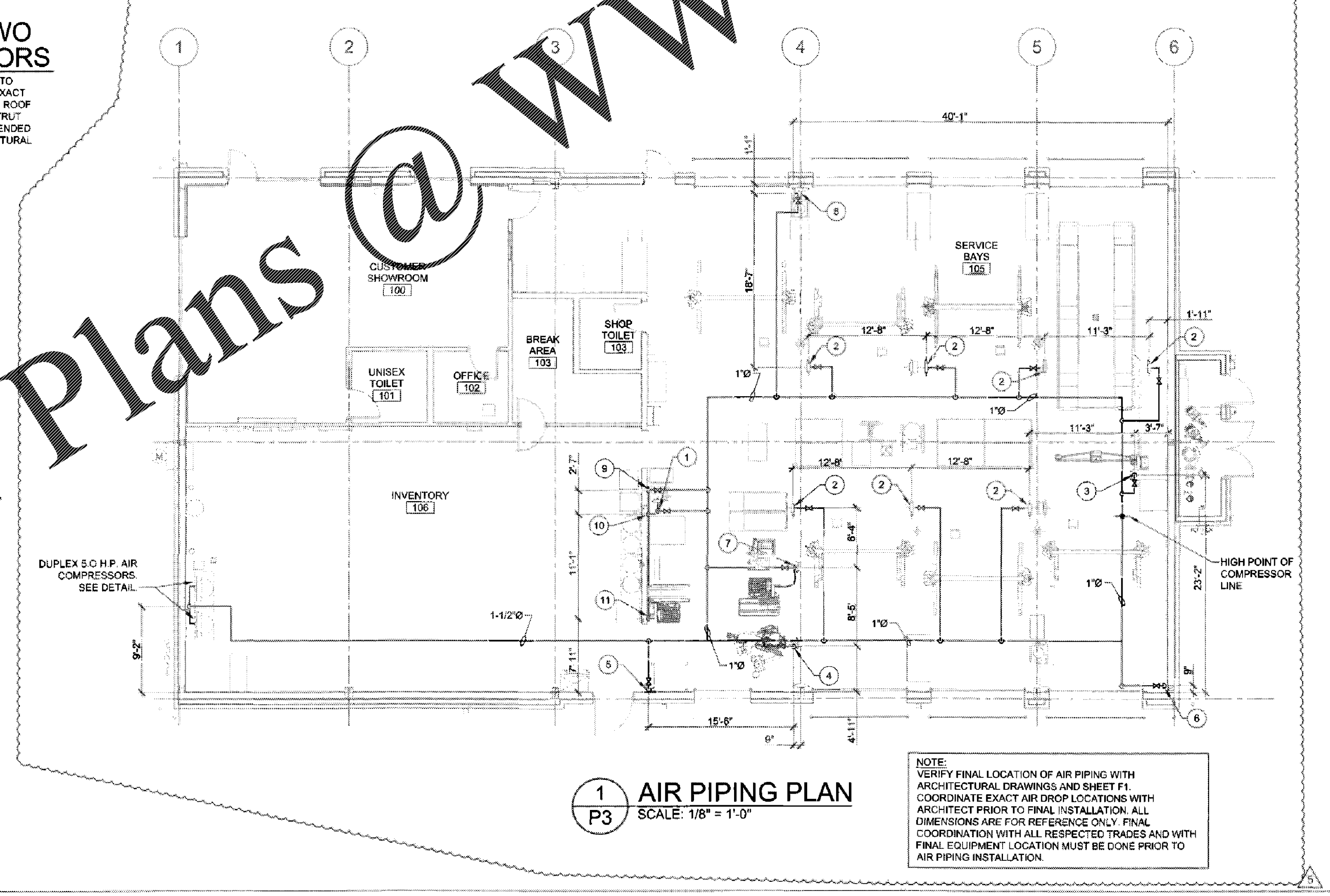

1 / P3 AIR PIPING PLAN

SCALE: 1/8" = 1'-0"

NOTE:
VERIFY FINAL LOCATION OF AIR PIPING WITH ARCHITECTURAL DRAWINGS AND SHEET F1. COORDINATE EXACT AIR DROP LOCATIONS WITH ARCHITECT PRIOR TO FINAL INSTALLATION. ALL DIMENSIONS ARE FOR REFERENCE ONLY. FINAL COORDINATION WITH ALL RESPECTED TRADES AND WITH FINAL EQUIPMENT LOCATION MUST BE DONE PRIOR TO AIR PIPING INSTALLATION.

AIR PIPING NOTES

1. PROVIDE SHUTOFF VALVES IN EACH BRANCH USING BALL VALVES. REFER TO AIR SUPPLY DETAIL ON THIS SHEET FOR MOUNTING HEIGHT.
2. INSTALL/ROUTE ALL PIPING TIGHT TO UNDERSIDE OF SERVICE BAY ROOF STRUCTURE.
3. MAKE FINAL CONNECTIONS TO ALL EQUIPMENT FURNISHED BY OTHERS PER MANUFACTURER'S INSTRUCTIONS.
4. PITCH PIPING BACK TO AIR COMPRESSOR. TAP ALL BRANCH PIPING TAKE-OFFS FROM TOP OF MAIN.
5. RUN 1/2" PIPING FROM SUPPLY MANIFOLD TO TIRE CHANGERS AND CONNECT PER MANUFACTURER'S INSTRUCTIONS. SEE MANUFACTURER'S DRAWINGS FOR DETAIL OF SUPPLY MANIFOLD.
6. ALL EQUIPMENT, MATERIAL AND LABOR NECESSARY FOR COMPLETION OF COMPRESSED AIR SYSTEM SHOWN ON DRAWINGS OR REFERRED TO IN SPECIFICATIONS TO BE FURNISHED AND INSTALLED BY CONTRACTOR UNLESS NOTED OTHERWISE.
7. WHERE DRAWINGS OR SPECIFICATIONS EXCEED GOVERNING CODE REQUIREMENTS, DESIGN SHALL GOVERN. INSTALL NO WORK CONTRARY TO OR BELOW MINIMUM LEGAL STANDARDS, WHETHER DRAWINGS AND SPECIFICATIONS FULLY COMPLY OR NOT.
8. CAUTION: ALL AIR LINES SHALL BE PROPERLY CLEANED AND BLOWN OUT PRIOR TO CONNECTING TO ANY OF THE EQUIPMENT SHOWN ON THIS SHEET.
9. PROVIDE TIRE BALANCING UNIT AIR SUPPLY.

ACERTUS CONSULTING GROUP, LLC
14817 West 95th Street • Lenexa, Kansas 66215
P 913.322.5150 • F 913.322.5155
www.AcertusGroup.com
Proj# 2020103

Firestone COMPLETE AUTO CARE

THIS DRAWING IS THE PROPERTY OF BRIDGESTONE RETAIL OPERATIONS, LLC AND IS LOANED ON THE EXPRESS CONDITION THAT IT IS NOT TO BE USED IN ANY WAY DELETERIOUS TO THE INTERESTS OF BRIDGESTONE RETAIL OPERATIONS, LLC. THE ACCEPTANCE OF THIS DRAWING WILL BE CONSTRUED AS AN ACCEPTANCE OF THE FOREGOING CONDITION AND AS ADMISSION TO THE EXCLUSIVE OWNERSHIP IN AND TO THE DRAWING BY BRIDGESTONE RETAIL OPERATIONS, LLC.

NEW FCAC STORE
2020 I
283 DAWSONVILLE HIGHWAY SW
GAINESVILLE, GA 30501

GEORGIA REGISTERED PROFESSIONAL ENGINEER No. PE031966 BRIAN J. TIMMONS 11/12/20

ISSUE BLOCK

1	07/20/20	REV #1
2	10/02/20	REV #2
4	10/16/20	REV #4
5	11/13/20	IFC

PROPERTY NO.:	160109
6 DIGIT NO.:	908074
4 DIGIT NO.:	78H3
AOR PROJECT NUMBER:	1955B55
TO PERMIT: DATE:	04/08/20
TO BID: DATE:	##-##-##

SHEET TITLE:
AIR PIPING PLAN AND NOTES

SHEET NUMBER:
P3

Nov 12, 2020 – 1:29pm – USER IanCollins
G:\bridgestone--firestone (engineering)\2020103 bsro -- gainesville, ga\Sheets\P3 AIR PIPING PLAN AND NOTES.dwg

Order Plans @ WWW.LDILine.com