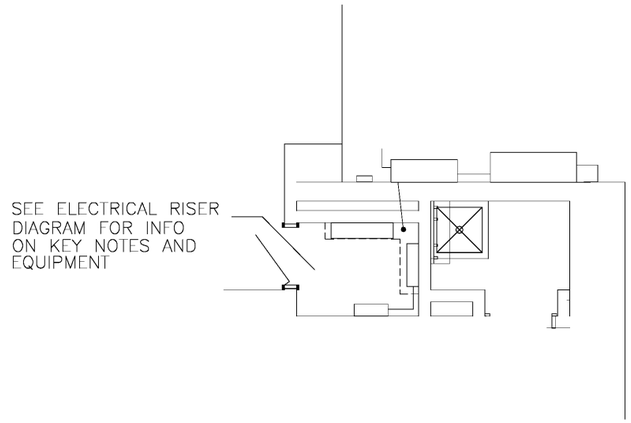

ENLARGED ELECTRICAL ROOM DETAIL

SCALE: 1/2" = 1'-0"

KEY NOTES

1. FURNISH AND INSTALL TWO (2) NEW SETS OF ALUMINUM FEEDERS TO TRANSFORMER ACROSS STREET. 3-#500MCM-3"C. COORDINATE INSTALLATION OF SECONDARY FEEDERS WITH UTILITY PRIOR TO BID. UPGRADED SERVICE TO BUILDING IS BEING DESIGNED AT 600 AMP, 120/240V, 1 PHASE.
2. CONTRACTOR SHALL VERIFY IN FIELD IF NEW WEATHERHEAD IS NEEDED TO ACCOMMODATE NEW SERVICE AND FEEDERS. FURNISH AND INSTALL NEW AS NECESSARY FOR COMPLETE INSTALLATION.
3. NEW C/T AND METER & METER SOCKET PROVIDED AND INSTALLED BY UTILITY COMPANY. CONTRACTOR SHALL COORDINATE NECESSARY RESPONSIBILITIES WITH UTILITY PRIOR TO BID.
4. DASHED BOUNDARY INDICATES ASSUMED AREA THAT UTILITY IS RESPONSIBLE FOR. CONTRACTOR SHALL VERIFY WITH UTILITY PRIOR TO BID.
5. FURNISH AND INSTALL TWO (2) NEW SETS OF ALUMINUM FEEDERS FROM C/T TO CONTRACTOR PROVIDED 600 AMP DISCONNECT SWITCH. 3-#500MCM-3"C.
6. FURNISH AND INSTALL NEW 400 AMP, 120/240V, 1 PHASE DISCONNECT SWITCH. SQUARE D, MODEL #H226NR (600/600, NEMA 3R).
7. FURNISH AND INSTALL TWO (2) NEW SETS OF COPPER FEEDERS FROM 600 AMP DISCONNECT SWITCH TO WIREWAY LOCATED IN ELECTRICAL #112. 3-#350MCM-3"C.
8. EXISTING ENTRANCE FOR TELEPHONE AND INTERNET. NO CHANGE TO SYSTEM ANTICIPATED.
9. EXISTING FEEDERS FOR TELEPHONE AND INTERNET FED FROM ACROSS THE STREET. NO WORK ANTICIPATED.
10. FURNISH AND INSTALL WIREWAY TO ACCOMMODATE NEW ELECTRICAL SERVICE. SEE ENLARGED ELECTRICAL ROOM DETAIL FOR ADDITIONAL INFORMATION.
11. LINE DENOTES BEND AROUND CORNER IN ROOM.
12. FURNISH AND INSTALL ONE (1) NEW SET OF COPPER FEEDERS. 3-600MCM-4"C.
13. FURNISH AND INSTALL NEW 600 AMP, 120/240V, 1 PHASE PANEL - DESIGNATED "PANEL FV". SQUARE D, MODEL# NQ.
14. FURNISH AND INSTALL ONE (1) NEW SET OF COPPER FEEDERS. 3-#3/0-2"C.
15. EXISTING 200 AMP PANEL TO REMAIN.
16. FURNISH AND INSTALL ONE (1) NEW SET OF COPPER FEEDERS. 3-#3-2"C.
17. EXISTING 125 AMP PANEL TO REMAIN.

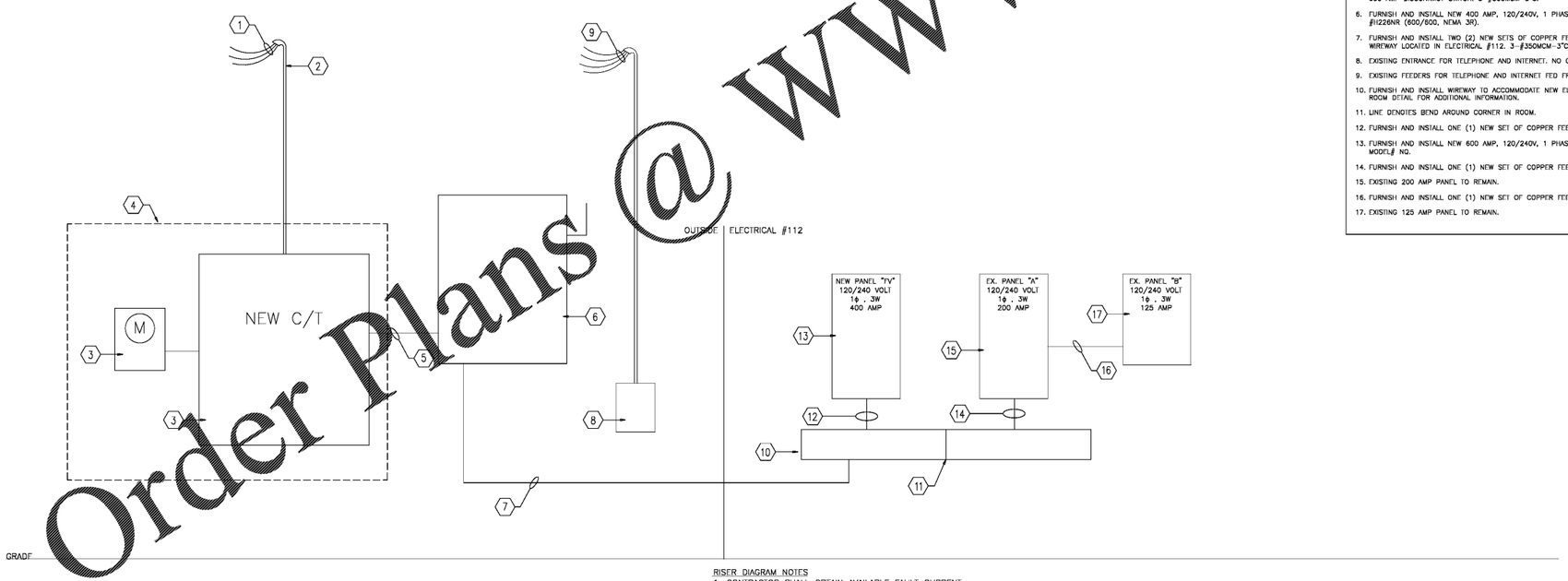

RISER DIAGRAM NOTES

1. CONTRACTOR SHALL OBTAIN AVAILABLE FAULT CURRENT RATING AND PROVIDE PROTECTION FOR MAIN CIRCUIT BREAKER AND ALL BRANCH DEVICES AS REQUIRED.
2. CONTRACTOR TO MAINTAIN ALL REQUIRED CLEARENCES PER ARTICLE 110-26 NEC

ELECTRICAL RISER DIAGRAM

NOT TO SCALE

Order Plans @ WWW.LDILine.com

DPCE
1301 Solana Blvd.
Bldg. 1, Suite 1420
Westlake, TX 76262
+1 817 410 2858

WWW.DONPENN.COM
NORTH CAROLINA REGISTERED ENGINEERING FIRM F1413

MD ARCHITECTS

FAMILY VET GROUP

WEST ASHEVILLE FAMILY VET HOSPITAL

547 HAYWOOD ROAD
ASHEVILLE, NC 28809

ELECTRICAL DETAILS

NORTH CAROLINA PROFESSIONAL SEAL 022419 ENGINEER S. J. PENN
09/28/2020

CERTIFICATION

NO	ISSUED FOR	DATE
1	PLAN REVIEW SET	09/28/20

PLOT DATE: 9/4/2020 11:18:17 AM
PROJECT NUMBER: PROJECT #
SHEET: ELECTRICAL DETAILS

E4.0

CHECKED BY: RDR
DRAWN BY: Author

THESE DRAWINGS AND SPECIFICATIONS CONTAINED HEREIN, AND THE IDEAS, DESIGNS AND ARRANGEMENTS REPRESENTED THEREIN, ARE THE EXCLUSIVE PROPERTY OF DON PENN ENGINEERING & ARCHITECTURE, P.C. AND SHALL NOT BE USED, IN WHOLE OR IN PART, FOR ANY PURPOSE WHATSOEVER WITHOUT THE PRIOR WRITTEN CONSENT OF DON PENN ENGINEERING & ARCHITECTURE, P.C.
ALL REPRODUCTIONS ARE AND SHALL REMAIN THE PROPERTY OF DON PENN ENGINEERING & ARCHITECTURE, P.C.
COPYRIGHT © 2020 DON PENN ENGINEERING & ARCHITECTURE, P.C. ALL RIGHTS RESERVED