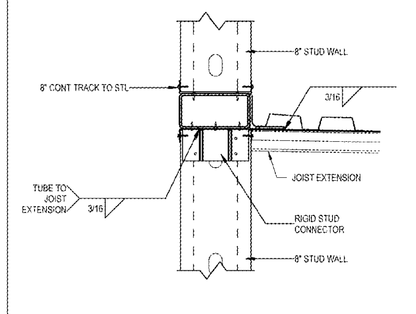

18 S8 TOWER WALL CONNECTIONS3
1 1/2" = 1'-0"

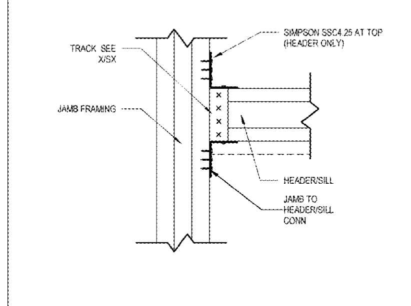

13 S8 HEADER/SILL TO JAMB CONNECTIONS2
1 1/2" = 1'-0"

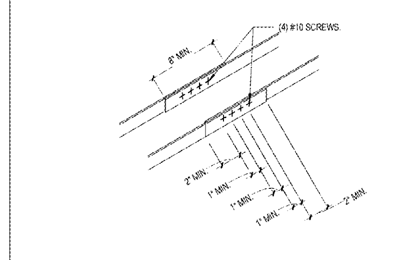

8 S8 STRAP SPLICE DETAL2
1" = 1'-0"

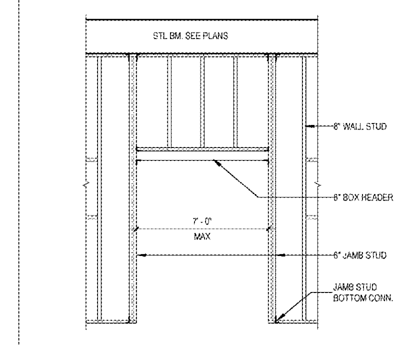

3 S8 DOOR OPENING FRAMING2
3/8" = 1'-0"

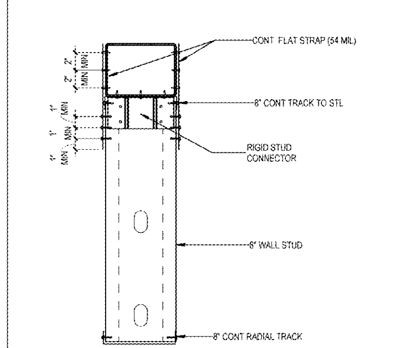

17 S8 TOWER FRONT ARCH FRAMING DETAIL3
1 1/2" = 1'-0"

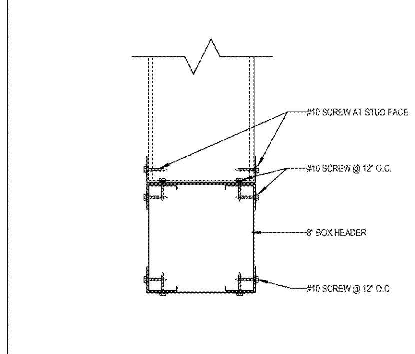

12 S8 HEADER DETAIL2
3" = 1'-0"

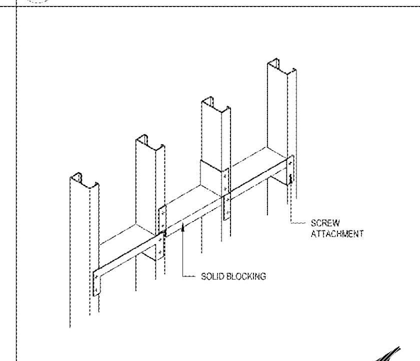

7 S8 SOLID BLOCKING DETAIL2
3/4" = 1'-0"

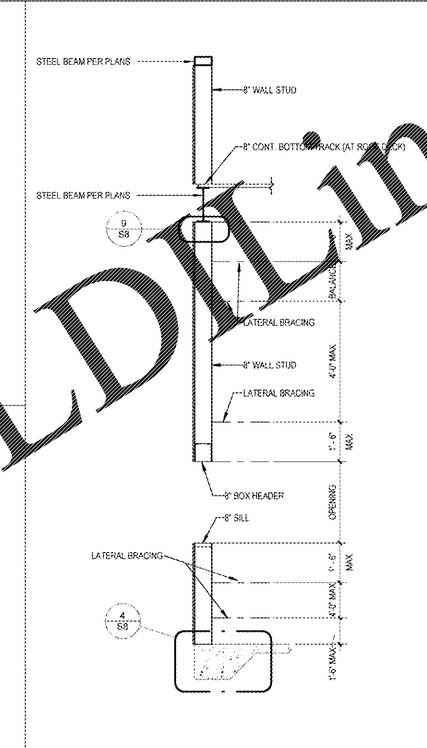

2 S8 TYPICAL EXTERIOR WINDOW FRAMING2
3/8" = 1'-0"

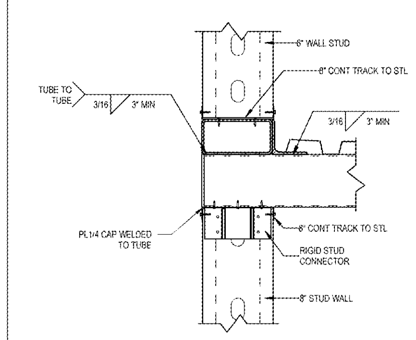

16 S8 TOWER WALL CONNECTION AT EDGE OF WALL3
1 1/2" = 1'-0"

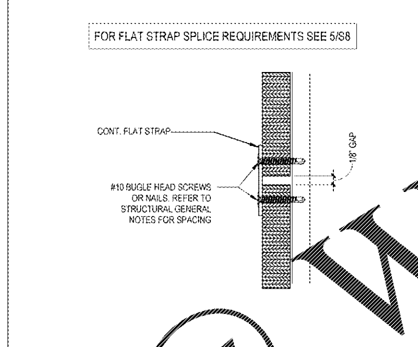

11 S8 ENLARGED PLYWOOD STRAP DTL.2
1 1/2" = 1'-0"

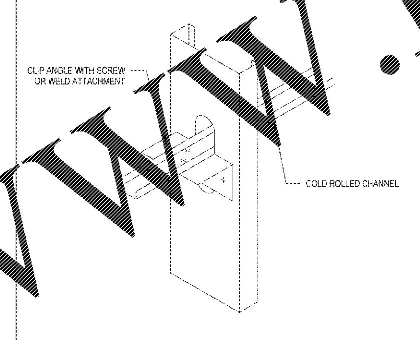

6 S8 CHANNEL BRIDGING DETAIL1
1/8" = 1'-0"

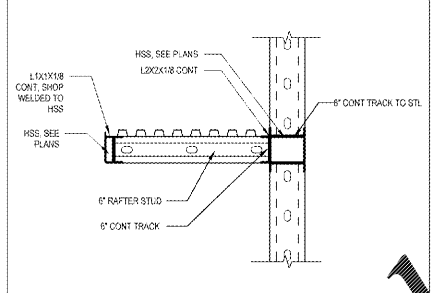

20 S8 OVERHANG DETAIL
3/4" = 1'-0"

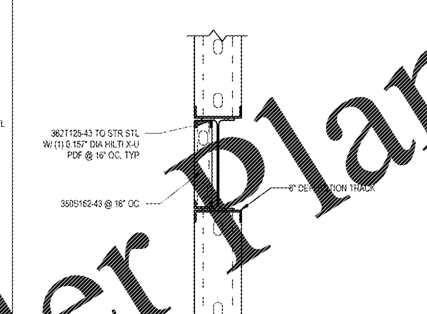

15 S8 WALL TOP CONNECTION1
1" = 1'-0"

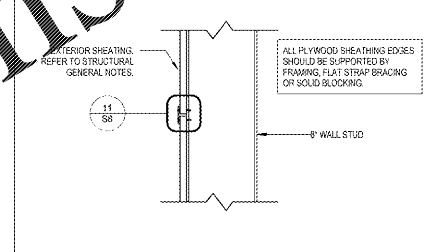

10 S8 PLYWOOD STRAPPING DETAIL2
1 1/2" = 1'-0"

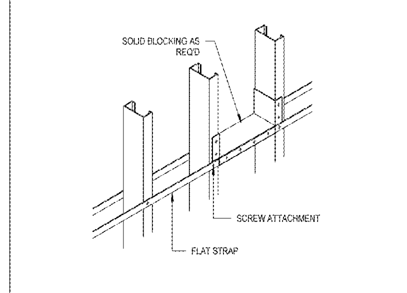

5 S8 FLAT STRAPPING DETAIL1
3/4" = 1'-0"

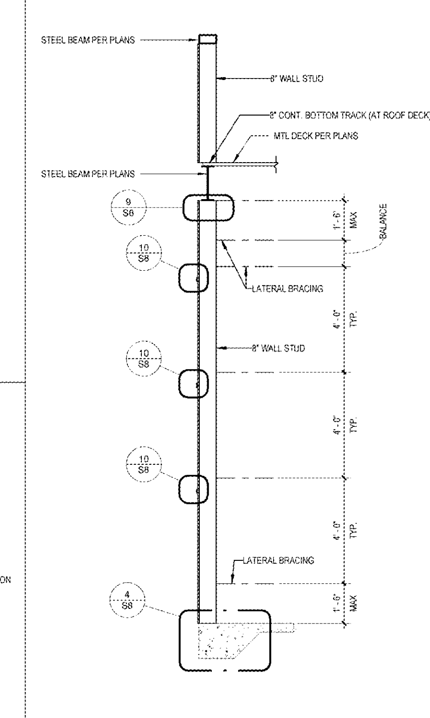

1 S8 TYPICAL EXTERIOR WALL FRAMING2
3/8" = 1'-0"

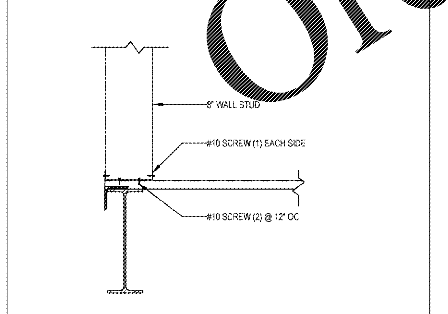

19 S8 BOTTOM TRACK TO MTL. DECK2
1" = 1'-0"

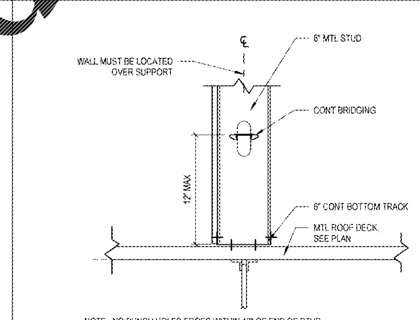

14 S8 TOWER COLD-FORMED FRAMING BASE CONNECTION - CHANNEL PERPENDICULAR
1 1/2" = 1'-0"

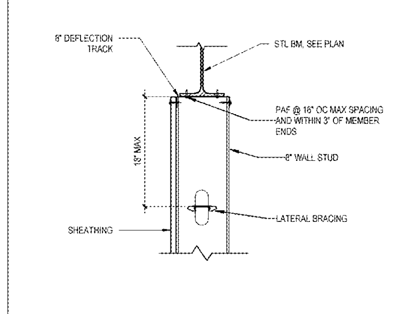

9 S8 COLD-FORMED WALL TO BOTTOM OF STEEL CONN2
1 1/2" = 1'-0"

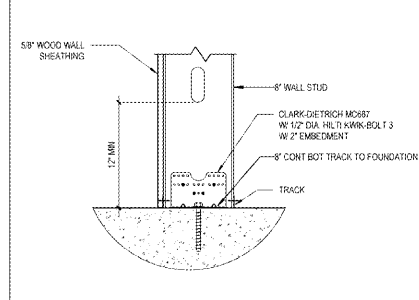

4 S8 LIGHT GAUGE INFILL WALL BASE CONNECTION
1 1/2" = 1'-0"

EXTERIOR COLD-FORMED FRAMING NOTES

ITEM	NOTES	COMMENTS
6" CONT TRACK		
6" RAFTER STUD	600S162-54MIL(16GA)(50KSI) PUNCHED STUD SPACED @ 16" OC MAX	
6" STUD	600S162-54MIL(16GA)(50KSI) PUNCHED STUD SPACED @ 16" OC MAX	AT OVERHANGS
8" BOX HEADER		ALL EXTERIOR WALLS
8" CONT BOT TRACK TO FOUNDATION	1/2" SIMPSON TITEN HD W/ 5 3/4" EMBED ANCHORS @ 32" OC & WITHIN 6" OF WALL OPENINGS / EDGES	ALL EXTERIOR WALLS
8" CONT BOT TRACK TO STL.	CONT 800T125-54 MIL (16 GA) (50 KSI) W/ (2) P.A.F. TO STEEL TUBE AT 12" O.C. AND AT EA. END OF TRACK	
8" CONT BOTTOM TRACK (AT ROOF DECK)	CONT 800T125-43MIL (18GA) (50 KSI) W/(2) #10 SCREWS TO EA STUD AND (2) #10 SCREWS TO ROOF DECK @ 12" OC AND AT EA END OF TRACK	
8" CONT RADIAL TRACK	SIMPSON STRONG-TIE BENDY ARCH	
8" CONT TOP TRACK	CONT 800T125-54MIL(16GA)(50KSI) W/ (2) #10 SCREWS TO EA STUDKSI) PUNCHED STUD SPACED @ 16" OC MAX	
8" CONT TOP TRACK TO STL	CONT 800T125-54MIL(16GA)(50KSI) W/ (2) #10 SCREWS TO EA STUDKSI) PUNCHED STUD SPACED @ 16" OC MAX W/ (2) P.A.F. TO STEEL TUBE AT 12" O.C. AND AT EA. END OF TRACK	
8" CONT TRACK	CONT 800T125-54MIL(16GA) W/(2) #10 SCREWS TO EA STUD.	
8" CONT TRACK TO STL		
8" CONT. BOTTOM TRACK (AT ROOF DECK)	CONT 800T125-54MIL (16GA) (50 KSI) W/(2) #10 SCREWS TO EA STUD AND (2) #10 SCREWS TO ROOF DECK @ 12" O.C. AND AT EA. END OF TRACK	
8" DEFLECTION TRACK		
8" JAMB STUD		
8" SILL		ALL EXTERIOR WALLS (MAX LENGTH 6'-0")
8" WALL STUD		STUD AT 12" OC FOR STUD HEIGHT OF 16'-8" MAX FOR STUDS IN WIND ZONE Z5 & AT 16" OC FOR STUD HEIGHT OF 16'-8" MAX FOR STUDS IN WIND ZONE Z4
CONT FLAT STRAP	2" MIN. 33MIL (20GA)(33KSI)	INSTALLED ON THE EXTERIOR SIDE ONLY
CONT FLAT STRAP (54 MIL)	2" MIN. 54MIL (16GA)(50KSI)	12" LONG MIN W/ (3) #10 SCREWS TO EA STUD & (3) PAF TO STL
CONT. FLAT STRAP	2" MIN. 33MIL (20GA)(33KSI)	INSTALLED ON THE EXTERIOR SIDE ONLY
CONT. FLAT STRAP (54 MIL)	2" MIN. 54MIL (16GA)(50KSI)	12" LONG MIN W/ (3) #10 SCREWS TO EA STUD & (3) PAF TO STL
LATERAL BRACING	BRIDGING, BLOCKING, OR FLAT STRAPPING (GC PREFERENCE) - SEE DETAILS	4'-0" OC VERT SPACING & 18" FROM EA END OF STUD

COLD-FORMED FASTENER SCHEDULE

FASTENER TYPE	FASTENER INFORMATION	APPLICATION	COMMENTS
#10 SCREW	#10 SELF-DRILLING SCREW	COLD FORM STEEL TO COLD FORM STEEL (18 GA. OR THICKER)	16 THREADS PER INCH, #3 DRILL POINT
#10 SCREW	#10 SELF-DRILLING SCREW	COLD FORM STEEL TO METAL DECK	16 THREADS PER INCH, #1 DRILL POINT
PAF	GALVANIZED - 0.157" SHANK DIA. POWDER ACTUATED FASTENER	EXTERIOR	SIMPSON PDPA OR HILTI X-U

COLD-FORMED CONNECTOR SCHEDULE

LOCATION	CONNECTOR	INSTALLATION NOTES
8" STUD WALL	800S162-54MIL(16 GA)(50KSI) PUNCHED STUD SPACED @ 16" OC MAX	ALL EXTERIOR WALLS
CONT. ANGLE TO PARAPET STUD CONNECTION	THE STEEL NETWORK STIFFCLIP CL600-68	FASTEN TO STUDS USING (4) #12 TEK SCREWS PATTERN #5 & (3) P.A.F. TO STEEL ANGLE
JAMB STUD BOTTOM CONN.	THE STEEL NETWORK STIFFCLIP CL600-68	FASTEN TO STUDS USING (6) #12 TEK SCREWS PATTERN #3 & FASTEN TO CONC USING (1) 1/2" DIA SIMPSON TITEN HD SCREW AHR W/ 6" EMBEDMENT INTO CONC. PROVIDE 4" MIN EDGE DIST
JAMB TO HEADER/SILL CONN	SIMPSON SSC4.25 (LLV)	(5) #10 SCREWS INTO JAMB AND (4) #10 SCREWS INTO HEADER/SILL
RIGID STUD CONNECTOR	STEEL NETWORK STIFFCLIP AL600	(4) #10-16 HWH SCREWS THROUGH LONG LEG TO STUD & W/ (3) 0.157" DIA PAF THROUGH TRACK TO STL

FRAMING NOTES:
1. SCREWS OR NAILS SHALL PENETRATE ALL FRAMING COMPONENTS.
2. SCREWS SHALL HAVE A MIN. OF THREE EXPOSED THREADS EXTENDING THROUGH THE STEEL BEYOND ALL FRAMING COMPONENTS CONNECTED.
3. PROVIDE 1/2" MIN. EDGE DIST. FOR #10 SELF DRILLING SCREWS OR NAILS INTO STRAP.
4. PROVIDE 3/8" MIN. EDGE DIST. FOR #10 SELF DRILLING SCREWS INTO PLYWOOD.
5. PROVIDE 1/2" MIN EDGE DIST & 1" MIN SPACING FOR PAF INTO STL (TYP) PAF ARE TO FULLY PENETRATE THE STRUCT STL & SHOULD HAVE A KNURLED SHANK
6. FOR LOCATION OF WIND ZONES Z4 & Z5 SEE S1
7. SOLID BLOCKING TO BE INSTALLED BETWEEN FIRST 2 STUDS ADJACENT TO A COLUMN AND AT 12 FT ON CENTER ALONG THE LENGTH OF THE WALL

EXTERIOR COLD FORMED STEEL NOTES, UNO
1. ALL STUD TO STUD CONNECTIONS SHALL BE (4) #10 TEK SCREWS
2. ALL STUD TO TRACK CONNECTIONS SHALL BE (1) #10 TEK SCREWS EA SIDE OF STUD
3. ALL TRACK TO STL CONNECTIONS SHALL BE (2) 0.157" DIA HILTI X-U PAF AT EA STUD LOCATION. PAF SHANK SHALL FULLY PENETRATE STL THICKNESS
4. SCREWS SHALL PENETRATE ALL FRAMING COMPONENTS. SCREWS SHALL HAVE A MIN OF THREE EXPOSED THREADS EXTENDING THROUGH THE STL BEYOND ALL FRAMING COMPONENTS CONNECTED. PROVIDE 1/2" MIN EDGE DIST & 1" MIN SPACING FOR #10 & #12 SELF- DRILLING SCREWS, TYP
5. PROVIDE 1/2" MIN EDGE DIST & 1" MIN SPACING FOR PAF INTO STL (TYP) PAF ARE TO FULLY PENETRATE THE STRUCT STL & SHOULD HAVE A KNURLED SHANK
6. PROVIDE 3" MIN EDGE DIST & 4" MIN SPACING FOR HILTI KWIK-CON II ANCHOR INTO CONC. TYP

Cuhaci & Peterson
Architects Engineers Planners
1925 Prospect Ave.
Orlando, FL 32814
P (407) 661-9100
F (407) 661-9101
www.c-p.com

CLIENT NAME
WAWA
260 WEST BALTIMORE PIKE
WAWA, PENNSYLVANIA 19063

PROJECT NAME
WAWA F85L 2019.01 STORE #5351 - CMM
1004 EDGEWOOD AVE.
JACKSONVILLE, FL 32254

SHEET TITLE
COLD-FORMED STEEL FRAMING DETAILS

Revision Schedule

No.	Description	Date
A	REV 2019.01	09/09/2020
	PRE-BID SET	09/10/2020
	BID SET	09/24/2020

COPYRIGHT © "All reports, plans, specifications, computer files, field data, notes and other documents and instruments of service prepared by Cuhaci & Peterson (C & P) as instruments of service remain the property of C & P ... violation of Federal copyright laws.

PROJECT NO. 2170780
DATE 09-09-2020
DRAWN RC
CHECKED WSM

S8

Order Plans @ WWW.LDILine.com