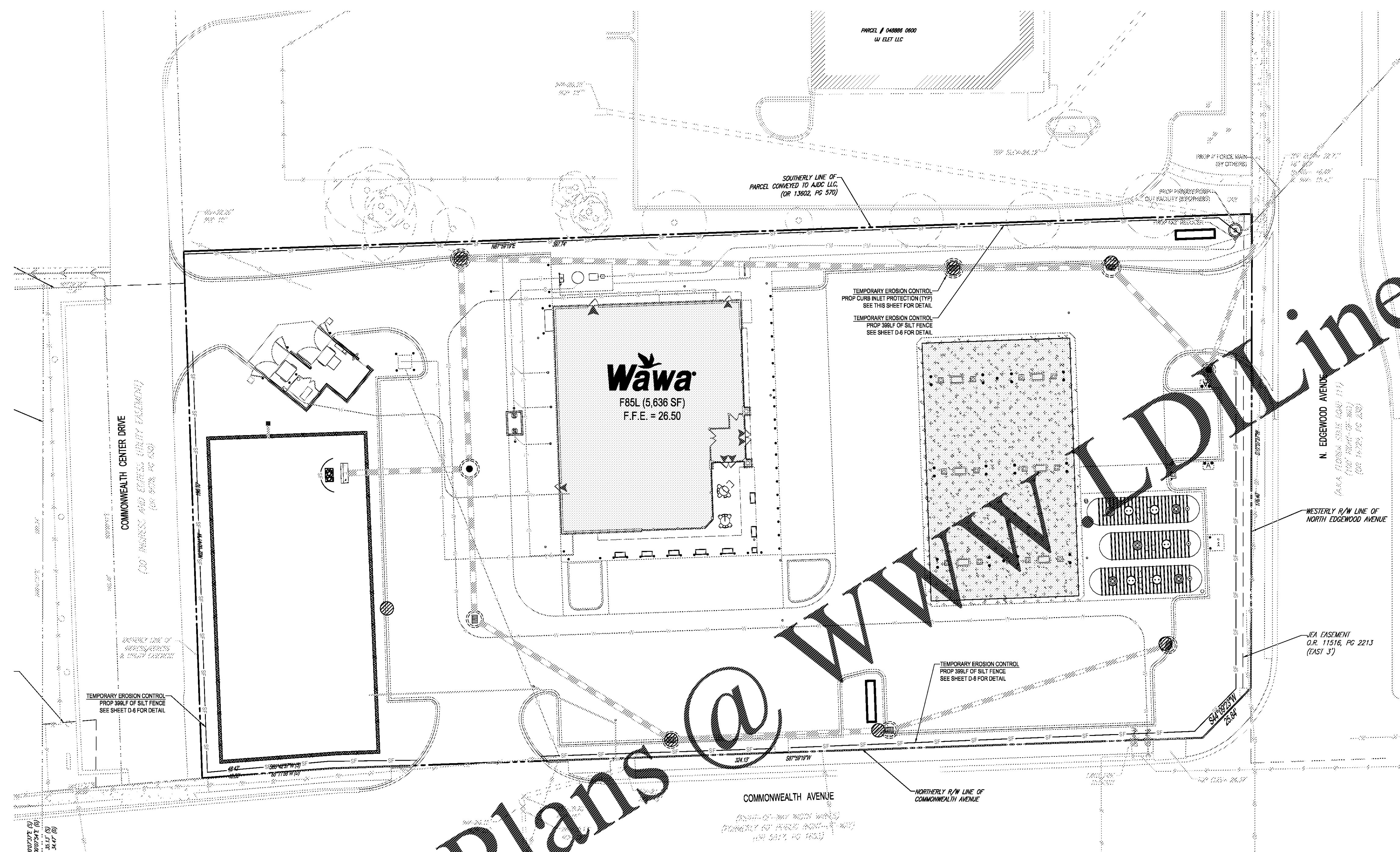


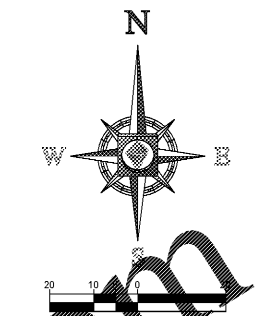


| LEGEND | |
|---|---|
| PROP SILT FENCE | —SF—SF— |
| PROP. INLET PROTECTION | (hatched circle) |

## DATUM NOTE:

ELEVATIONS SHOWN HEREON ARE IN FEET AND ARE REFERENCES TO THE NORTH AMERICAN VERTICAL DATUM OF 1988 (NAVD88).

## FEMA MAP INFORMATION:

THE PROPERTY SHOWN HEREON APPEARS TO LIE IN FLOOD ZONE "X" ACCORDING TO THE FLOOD INSURANCE RATE MAP, COMMUNITY NUMBER 12031C, PANEL NUMBER 0388, SUFFIX H, EFFECTIVE JUNE 3, 2013, FOR THE CITY OF JACKSONVILLE, FLORIDA.

## SEQUENCE OF CONSTRUCTION

UPON IMPLEMENTATION AND INSTALLATION OF THE FOLLOWING AREAS; TRAILER,PARKING, LAYDOWN, PORTABLE RESTROOMS, WHEELED WASTE DISPOSAL DUMPSTER(S), WHEEL WASH, CONCRETE WASHOUT, FUEL AND MATERIAL STORAGE CONTAINERS, SOLID WASTE CONTAINERS, ETC. IMMEDIATELY DENOTE THEM ON THE SITE MAPS AND NOTE ANY CHANGES IN THEIR LOCATIONS ON THE SITE MAP.

PHASE 1

1. CONSTRUCT STABILIZED CONSTRUCTION ENTRANCE AND INSTALL SILT FENCE
2. INSTALL INLET PROTECTION AT EXISTING INLET(S)
3. PREPARE CLEARING AND GRUBBING OF THE SITE, IF APPLICABLE
4. INSTALL STORMWATER CONVEYANCE STRUCTURES AND CULVERTS, ENSURE THAT NEW INLETS ARE PROTECTED PRIOR TO MAKING THE OUTFALL CONNECTION

PHASE 2

1. PERFORM MASS GRADING, ROUGH GRADE TO ESTABLISH PROPOSED DRAINAGE PATTERNS
2. START CONSTRUCTION OF THE PROPOSED BUILDING PAD AND STRUCTURES
3. TEMPORARILY SEED WITH PURE LIVE SEED THROUGHOUT THE CONSTRUCTION DISTURBED AREAS THAT WILL BE INACTIVE FOR 7 DAYS OR MORE AS REQUIRED BY THE GENERIC PERMIT.

## MAINTENANCE NOTES:

N.P.D.E.S. PERMIT COMPLIANCE REQUIRES INSPECTIONS EVERY 7 CALENDAR DAYS BY A NPDES QUALIFIED INSPECTOR AND PERIODIC INSPECTIONS WITHIN 24 HOURS OF ANY RAINFALL EVENT OF 0.5 INCHES OR GREATER. THESE INSPECTIONS MAY RESULT IN RECOMMENDATIONS FOR ROUTINE MAINTENANCE OF THE SOIL EROSION CONTROL DEVICES, AS WELL AS FURTHER MAINTENANCE AS OUTLINED BELOW. IT SHALL BE THE CONTRACTORS RESPONSIBILITY TO ENSURE NPDES COMPLIANCE.

1. INSPECTIONS BY CONTRACTOR MUST OCCUR AT LEAST ONCE A WEEK OR WITHIN 24 HOURS OF A STORM EVENT 0.5 INCHES OR GREATER.
2. THROUGHOUT THE CONSTRUCTION PERIOD, ALL MUD/SILT TRACKED ONTO EXISTING ROADS FROM THE SITE DUE TO CONSTRUCTION SHALL BE IMMEDIATELY REMOVED BY THE CONTRACTOR.
3. CATCH BASIN INLET AND CONCRETE FLUME FILTERS SHALL BE MAINTAINED CLEAN AT ALL TIMES THROUGHOUT THE CONSTRUCTION PERIOD. WEEKLY INSPECTIONS WILL BE PERFORMED EVERY 7 CALENDAR DAYS. IF A FILTER HAS HOLES OR IS INUNDATED WITH SEDIMENT, THE FILTER WILL REQUIRE REPLACEMENT BY CONTRACTOR.
4. CONSTRUCTION ACCESS AND TRACKING MAT MUST BE MAINTAINED BY CONTRACTOR. REPLENISH CRUSHED AGGREGATE IF PRESENT LAYER IS FILLED WITH SEDIMENT, POOLING WATER OR HAS RUTS. A NEW LAYER MAY BE ADDED IF OLD LAYERS BECOME COMPACTED.
5. SILT FENCE IS TO BE INSPECTED DAILY BY CONTRACTOR AND EVERY 7 CALENDAR DAYS BY NPDES QUALIFIED INSPECTOR. IF REPAIRS OR REPLACEMENT IS NECESSARY, IT SHALL BE PERFORMED IMMEDIATELY. THE SILT FENCE SHOULD BE TRENCHED IN, BACK-FILLED, AND STAPLED OR STAKED ACCORDING TO THE MANUFACTURER'S SPECIFICATIONS. MAINTENANCE INCLUDES THE REMOVING OF BUILT-UP SEDIMENT. WHEN THE SEDIMENT ACCUMULATES TO 1/3 OF THE HEIGHT OF THE FENCE, CONTRACTOR MAY HAVE TO REMOVE, REPLACE, RETRENCH, OR RE-BACKFILL THE FENCE IF IT FAILS. IT WOULD ALSO BE NECESSARY TO REINSTALL IF ANY PORTION OF THE FENCING WAS DAMAGED BY CONSTRUCTION MACHINERY.
6. SEEDING OR RESEEDING MAY BE REQUIRED IMMEDIATELY TO AREAS WHICH HAVE BEEN DAMAGED BY RUNOFF.
7. THE CONTRACTOR SHALL CONTINUOUSLY ENSURE THAT THE PERIMETER OF THE SITE, INCLUDING CONSTRUCTION ENTRANCES, IS SECURED FROM ALLOWING DEBRIS TO LEAVE THE SITE DUE TO CONSTRUCTION ACTIVITY OR RAINFALL EVENTS. A WEEKLY LOG SHALL BE UPDATED AND KEPT ON-SITE IN ACCORDANCE WITH THE NPDES PERMIT. BY BIDDING DOCUMENTS CONTRACTOR ACKNOWLEDGES HE/SHE IS AWARE OF NPDES GUIDELINES AND POLICIES AS WELL AS BEST MANAGEMENT PRACTICES AND ASSUMES SOLE RESPONSIBILITY FOR FINES IMPOSED BY GOVERNMENTAL AGENCIES DUE TO VIOLATIONS.

## POLLUTION PREVENTION NOTES:

A.) EROSION AND SEDIMENT CONTROL BMP'S IN ADDITION TO THOSE PRESENTED ON THESE PLANS SHALL BE IMPLEMENTED AS NECESSARY TO PREVENT TURBID DISCHARGES FROM FLOWING ONTO ADJACENT PROPERTIES OR ROADWAYS, OFF SITE STORMWATER CONVEYANCES OR RECEIVING WATERS, OR ON SITE WETLANDS AND SURFACE WATERS. BMP'S SHALL BE DESIGNED, INSTALLED, AND MAINTAINED BY THE SITE OPERATOR TO ENSURE THAT OFF SITE SURFACE WATER QUALITY REMAINS CONSISTENT WITH STATE AND LOCAL REGULATIONS. [THE OPERATOR IS THE ENTITY THAT OWNS OR OPERATES THE CONSTRUCTION ACTIVITY AND HAS AUTHORITY TO CONTROL THOSE ACTIVITIES AT THE PROJECT NECESSARY TO ENSURE COMPLIANCE.]

B.) CONTRACTOR SHALL DEVELOP AND IMPLEMENT A PLAN TO ASSURE THAT ALL WASTE, SUCH AS DISCARDED BUILDING MATERIALS, CONCRETE TRUCK WASH-OUT, CHEMICALS, LITTER AND SANITARY WASTE, ARE PROPERLY CONTROLLED WHILE ON-SITE AND TRANSPORTED AND DISPOSED OF (OFF-SITE) IN ACCORDANCE WITH ALL APPLICABLE LOCAL, STATE AND FEDERAL REGULATIONS. NO WASTE MATERIALS OF ANY KIND ARE PERMITTED TO BE BURIED ON-SITE OR DISCHARGED TO SURFACE WATERS OF THE STATE OR TO THE CITY STORM WATER SYSTEM.

C.) CONTRACTOR SHALL PERIODICALLY SWEEP EXISTING ONSITE PAVED SURFACES AS WELL AS ALL ABUTTING CITY STREETS, COUNTY ROADS AND STATE HIGHWAYS (AS APPROPRIATE FOR THE PARTICULAR PROJECT) TO KEEP THOSE SURFACES IN SUBSTANTIALLY SEDIMENT-FREE CONDITION. SWEEPING SHALL BE DONE ON A PERIODIC, AS-NEEDED BASIS THROUGHOUT THE WORK WEEK INCLUDING, MOST IMPORTANTLY, AFTER EVERY RAIN EVENT AND EVERY FRIDAY AFTERNOON PRIOR TO CREASING WORK FOR THE WEEK. LDR 102-312, 122-217 (3) (CC).

D.) OFF SITE SURFACE WATER DISCHARGES, OR DISCHARGES TO ONSITE WETLANDS OR SURFACE WATERS WITH TURBIDITY IN EXCESS OF 29 NEPHELOMETRIC TURBIDITY UNITS (NTU'S) ABOVE BACKGROUND LEVEL SHALL BE IMMEDIATELY CORRECTED. SUCH INCIDENTS SHALL BE REPORTED TO WATER RESOURCES WITHIN 24 HOURS OF THE OCCURRENCE. THE REPORT SHALL INCLUDE THE CAUSE OF THE DISCHARGE AND CORRECTIVE ACTIONS TAKEN.

E.) THE OPERATOR SHALL ENSURE THAT ADJACENT PROPERTIES ARE NOT IMPACTED BY WIND EROSION, OR EMISSIONS OF UNCONFINED PARTICULATE MATTER IN ACCORDANCE WITH RULE 62-296.320(4)(C)1, F.A.C., BY TAKING APPROPRIATE MEASURES TO STABILIZE AFFECTED AREAS.

F.) FUEL AND OTHER PETROLEUM PRODUCT SPILLS THAT ENTER STORMWATER DRAINS OR WATERBODIES, OR FUEL AND OTHER PETROLEUM PRODUCT SPILLS THAT ARE IN EXCESS OF 25 GALLONS SHALL BE CONTAINED, CLEANED UP, AND IMMEDIATELY REPORTED TO WATER RESOURCES. SMALLER GROUND SURFACE SPILLS SHALL BE CLEANED UP AS SOON AS PRACTICAL.

G.) IF CONTAMINATED SOIL AND/OR GROUNDWATER IS DISCOVERED DURING DEVELOPMENT OF THE SITE, ALL ACTIVITY IN THE VICINITY OF THE CONTAMINATION SHALL IMMEDIATELY CEASE, AND WATER RESOURCES SHALL BE CONTACTED.

H.) PRIOR TO DEMOLITION OF EXISTING ON SITE STRUCTURES AN ASBESTOS SURVEY AND/OR ASBESTOS NOTIFICATION MAY BE REQUIRED.

I.) NATIONAL POLLUTANT DISCHARGE ELIMINATION SYSTEM:
- i. NPDES CONSTRUCTION GENERIC PERMIT COVERAGE SHALL BE OBTAINED AT LEAST 48 HOURS IN ADVANCE OF CONSTRUCTION COMMENCEMENT IN ACCORDANCE WITH RULE 62-621.300(4)(A), F.A.C.
- ii. A COPY OF THE CERTIFIED NPDES NOI, OR A COPY OF THE FDEP COVERAGE CONFIRMATION LETTER SHALL BE POSTED AT THE SITE IN ACCORDANCE WITH RULE 62-621.300(4)(A) PART III.C.2, F.A.C.
- iii. A COPY OF THE CERTIFIED NPDES NOI, OR A COPY OF THE FDEP COVERAGE CONFIRMATION LETTER SHALL BE PROVIDED TO WATER RESOURCES IN ACCORDANCE WITH RULE 62-621.300(4)(A)PART III.D.1, F.A.C.
- iv. THE SWPPP SHALL BE CERTIFIED IN ACCORDANCE WITH RULE 62-621.300(4)(A)PART V.D.6, F.A.C.
- v. A COPY OF THE SWPPP, AND COPIES OF THE INSPECTION AND MAINTENANCE RECORDS SHALL BE MAINTAINED AT THE PROJECT SITE, AND SHALL BE READILY AVAILABLE TO COUNTY OR STATE INSPECTORS.

J.) THE DISCHARGE OF GROUNDWATER PRODUCED THROUGH DEWATERING, TO SURFACE WATERS, OR ANY PORTION OF THE MS4 WILL REQUIRE SEPARATE PERMITTING FROM THE FLORIDA DEPARTMENT OF ENVIRONMENTAL PROTECTION (DEP). PERMIT(S) SHALL BE OBTAINED PRIOR TO THE COMMENCEMENT OF DEWATERING.

K.) ALL MATERIALS, MACHINERY AND VEHICLES SHALL BE STORED ON-SITE IN AN ORDERLY ORGANIZED FASHION. LDR 102-312

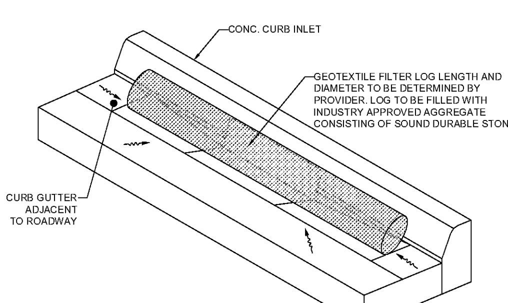


CURB INLET
FILTER LOG DETAIL
NOT TO SCALE


BOHLER ENGINEERING
SITE CIVIL AND CONSULTING ENGINEERING · PROGRAM MANAGEMENT · PERMITTING SERVICES
LAND SURVEYING · SUSTAINABLE DESIGN
LANDSCAPE ARCHITECTURE · TRANSPORTATION SERVICES
UPSTATE NEW YORK · NEW ENGLAND · BOSTON, MA · NEW YORK, NY · NEW YORK METRO · NORTHERN NEW JERSEY
SOUTHERN NEW JERSEY · PHILADELPHIA, PA · PITTSBURGH, PA · LEHIGH VALLEY, PA · SOUTHEASTERN, PA · REHOBOTH BEACH, DE
BALTIMORE, MD · SOUTHERN MARYLAND · NORTHERN VIRGINIA · CENTRAL VIRGINIA · RALEIGH, NC · WASHINGTON, DC
CHARLOTTE, NC · ATLANTA, GA · TAMPA, FL · SOUTH FLORIDA · DALLAS, TX



THE INFORMATION, DESIGN AND CONTENT OF THIS PLAN ARE PROPRIETARY AND SHALL NOT BE COPIED OR USED FOR ANY PURPOSE WITHOUT PRIOR WRITTEN AUTHORIZATION FROM BOHLER ENGINEERING. ONLY APPROVED, SIGNED AND SEALED PLANS SHALL BE UTILIZED FOR CONSTRUCTION PURPOSES
© 2017 BOHLER ENGINEERING


REVISIONS

| REV | DATE | COMMENT | BY |
|---|---|---|---|
| 1 | 01/08/18 | PER CITY & JEA COMMENTS | JRT |
| 2 | 03/06/18 | PER CITY & FDOT COMMENTS | JRT |
| 3 | 04/16/18 | PER FDOT COMMENTS | JRT |
| 4 | 01/28/20 | FORCE MAIN & IRRIGATION REVISION | ASZ |
| 5 | 02/11/20 | EQD COMMENTS | ASZ |
| 6 | 09/25/20 | PER WAWA | KM |

811 KNOW WHAT'S BELOW ALWAYS CALL 811 BEFORE YOU DIG
It's fast. It's free. It's the law.
www.callsunshine.com

PERMIT SET

| | |
|---|---|
| PROJECT No.: | FLT170064 |
| DRAWN BY: | JRT |
| CHECKED BY: | ASZ |
| DATE: | 9/26/20 |
| SCALE: | AS NOTED |
| CAD I.D.: | OB0 |

PROJECT:
Wawa
FOR
BRIGHTWORK REAL ESTATE

LOCATION OF SITE
1004 EDGEWOOD AVE NORTH
JACKSONVILLE, FL 32254
CITY OF JACKSONVILLE


BOHLER ENGINEERING
3820 NORTHDALE BLVD., SUITE 300B
TAMPA, FLORIDA 33624
Phone: (813) 812-4100
Fax: (813) 812-4101
FLORIDA BUSINESS CERT. OF AUTH. No. 30780
LANDSCAPE ARCHITECT BUSINESS LIC. No LC26000551


SHEET TITLE:
SOIL EROSION CONTROL PHASE II PLAN

SHEET NUMBER:
C-8


Order Plans @ WWW.LDILine.com