ONLINE CERTIFICATIONS DIRECTORY

BXUV.U419
Fire Resistance Ratings - ANSI/UL 263

Page Bottom

Design/System/Construction/Assembly Usage Disclaimer

- Authorities Having Jurisdiction should be consulted in all cases as to the particular requirements covering the installation and use of UL Listed or Classified products, equipment, system, devices, and materials.
- Authorities Having Jurisdiction should be consulted before construction.
- Fire resistance assemblies and products are developed by the design submitter and have been investigated by UL for compliance with applicable requirements. The published information cannot always address every construction nuance encountered in the field.
- When field issues arise, it is recommended the first contact for assistance be the technical service staff provided by the product manufacturer noted for the design. Users of fire resistance assemblies are advised to consult the general Guide Information for each product category and each group of assemblies. The Guide Information includes specifics concerning alternate materials and alternate methods of construction.
- Only products which bear UL's Mark are considered as Classified, Listed, or Recognized.

Fire Resistance Ratings - ANSI/UL 263

See General Information for Fire Resistance Ratings - ANSI/UL 263

Design No. U419

February 18, 2010

Nonbearing Wall Ratings — 1, 2, 3 or 4 Hr (See Items 4 & 5)

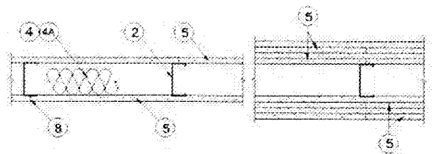

1. Floor and Ceiling Runners — (Not shown) — For use with Item 2 - Channel shaped, fabricated from min 25 MSG corrosion-protected steel, min depth to accommodate stud size, with min 1-1/4 in. long legs, attached to floor and ceiling with fasteners 24 in. OC max.

1A. Framing Members* - Floor and Ceiling Runners — Not shown - In lieu of Item 1 — For use with Item 2A, proprietary channel shaped, min. 3-5/8 in. deep, fabricated from min. 0.015 in. (min bare metal thickness) galvanized steel, attached to floor and ceiling with fasteners 24 in. OC max. Effective thickness is 0.034 in.

CLARKWESTERN BUILDING SYSTEMS INC — UltraSTEEL®.

DIETRICH INDUSTRIES INC — UltraSTEEL®.

1B. Framing Members* - Floor and Ceiling Runners — (Not shown - In lieu of Item 1) — For use with Item 2A, proprietary channel shaped, min. 2-1/2 in. deep, fabricated from min. 0.015 in. (min bare metal thickness) galvanized steel, attached to floor and ceiling fasteners 24 in. OC max. Effective thickness is 0.034 in.

CLARKWESTERN BUILDING SYSTEMS INC — UltraSTEEL®.

DIETRICH INDUSTRIES INC — UltraSTEEL®.

1C. Framing Members* - Floor and Ceiling Runner — Not shown - In lieu of Item 1 — For use with Item 2C, proprietary channel shaped runners, 3-5/8 in. deep attached to floor and ceiling with fasteners 24 in. OC max.

CALIFORNIA EXPANDED METAL PRODUCTS CO — ViperTrack™

CRACO MFG INC — SmartTrack™

MARINO\WARE A DIV OF WARE INDUSTRIES

INC — Viper25™ Track

1D. Framing Members* - Floor and Ceiling Runner — Not shown - In lieu of Item 1 — For use with Item 2D, proprietary channel shaped runners, 1-7/4 in. wide by 3-5/8 in. deep fabricated from min 0.020 in. thick galv steel, attached to floor and ceiling with fasteners spaced 24 in. OC max.

MARINO\WARE A DIV OF WARE INDUSTRIES

INC — Viper20G™ Track, Viper20D™ Track

1E. Framing Members*— Floor and Ceiling Runners — (Not shown) — In lieu of Item 1 - Channel shaped, attached to floor and ceiling with fasteners 24 in. OC. max.

ALLSTEEL & GYPSUM PRODUCTS INC — Type SUPREME Framing System

CONSOLIDATED FABRICATORS CORP,

BUILDING PRODUCTS DIV — Type SUPREME Framing System

QUAIL RUN BUILDING MATERIALS INC — Type SUPREME Framing System

SCAFCO STEEL STUD MANUFACTURING CO — Type SUPREME Framing System

STEEL CONSTRUCTION SYSTEMS INC — Type SUPREME Framing System

1F. Floor and Ceiling Runners — (Not shown)—For use with Item 2B- Channel shaped, fabricated from min 20 MSG corrosion-protected or galv steel, min depth to accommodate stud size, with min 1 in. long legs, attached to floor and ceiling with fasteners spaced max 24 in. OC.

1G. Framing Members* - Floor and Ceiling Runners — (Not shown, As an alternate to Item 1) — For use with Item 2F and 5F or 5G only, channel shaped, fabricated from min. 0.015 in. (min bare metal thickness) galvanized steel, attached to floor and ceiling with fasteners 24 in. OC. max.

CLARKWESTERN BUILDING SYSTEMS INC — CW ProTRAK

DIETRICH INDUSTRIES INC — DIETRICH ProTRAK

OMFCWBS L L C — ProTRAK

1H. Framing Members* - Floor and Ceiling Runner — Not shown - In lieu of Item 1 — For use with Item 2G, proprietary channel shaped runners, minimum width to accommodate stud size, with 1 - 1/4 in. long legs fabricated from min 0.015 in. (min bare metal thickness) galv steel, attached to floor and ceiling with fasteners spaced 24 in. OC max.

SUPER STUD BUILDING PRODUCTS — The Edge

2. Steel Studs — Channel shaped, fabricated from min 25 MSG corrosion-protected steel, min depth as indicated under Item 5, spaced a max of 24 in. OC. Studs to be cut 3/8 to 3/4 in. less than assembly height.

2A. Framing Members* - Steel Studs — In lieu of Item 2 - Proprietary channel shaped studs, min. depth as indicated under Item 5, fabricated from min. 0.015 in. (min bare metal thickness) galvanized steel, spaced a max of 24 in. OC. Studs to be cut 3/4 in. less than assembly height. Allowable use of studs is shown in the table below. For direct attachment of gypsum board only. Effective thickness is 0.034 in.

CLARKWESTERN BUILDING SYSTEMS INC — UltraSTEEL®

DIETRICH INDUSTRIES INC — UltraSTEEL®.

2B. Steel Studs — (As an alternate to Item 2, For use with Items 5B & 5E) Channel shaped, fabricated from min 20 MSG corrosion-protected or galv steel, 3-1/2 in. min depth, spaced a max of 16 in. OC. Studs friction-fit into floor and ceiling runners. Studs to be cut 5/8 to 3/4 in. less than assembly height.

2C. Framing Members* - Steel Studs — (As an alternate to Item 2, For use with Item 5C) - Proprietary channel shaped studs, 3-5/8 in. deep spaced a max of 24 in. OC. Studs to be cut 3/4 in less than the assembly height and installed with a ¼ in. gap between the end of the stud and track at the bottom of the wall. For direct attachment of gypsum board only.

CALIFORNIA EXPANDED METAL PRODUCTS CO — ViperStud™

CRACO MFG INC — SmartStud™

MARINO\WARE A DIV OF WARE INDUSTRIES

INC — Viper25™

2D. Framing Members* - Metal Studs — Not shown - In lieu of Item 2 — For use with Item 1D, proprietary channel shaped steel studs, min depth as indicated under Item 5, spaced a max if 24 in. OC, fabricated from min 0.020 in. thick galv steel. Studs cut 3/8 in. to 3/4 in. less in lengths than assembly heights.

MARINO\WARE A DIV OF WARE INDUSTRIES

INC — Viper20G™, Viper20D™

2E. Framing Members*— Steel Studs — In lieu of Item 2 - For Use with Item 1E- Channel shaped studs, min depth as indicated under Item 5, spaced a max of 24 in. OC. Studs to be cut 3/4 in. less than assembly height.

ALLSTEEL & GYPSUM PRODUCTS INC — Type SUPREME Framing System

CONSOLIDATED FABRICATORS CORP,

BUILDING PRODUCTS DIV — Type SUPREME Framing System

QUAIL RUN BUILDING MATERIALS INC — Type SUPREME Framing System

SCAFCO STEEL STUD MANUFACTURING CO — Type SUPREME Framing System

STEEL CONSTRUCTION SYSTEMS INC — Type SUPREME Framing System

2F. Framing Members*— Steel Studs — (Not shown, As an alternate to Item 2) — For use with Item 1G and 5F or 5G only, channel shaped studs, min depth as indicated under Item 5F, fabricated from min. 0.015 in. (min bare metal thickness) galvanized steel, spaced a max of 24 in. OC. Studs to be cut 3/4 in. less than assembly height.

CLARKWESTERN BUILDING SYSTEMS INC — CW ProSTUD

DIETRICH INDUSTRIES INC — DIETRICH ProSTUD

OMFCWBS L L C — ProSTUD

2G. Framing Members* - Metal Studs — Not shown - In lieu of Item 2 — For use with Item 1H, proprietary channel shaped steel studs, minimum width indicated under Item 5, 1-1/4 in. deep fabricated from min 0.015 in. (min bare metal thickness) galvanized steel. Studs 3/8 in. to 3/4 in. less in lengths than assembly heights.

SUPER STUD BUILDING PRODUCTS — The Edge

3. Wood Structural Panel Sheathing — (Optional, For use with Item 5 Only.) (Not Shown) - 4 ft wide, 7/16 in. thick oriented strand board (OSB) or 15/32 in. thick structural 1 sheathing (plywood) complying with DOC PS1 or PS2, or APA Standard PRP 108, manufactured with exterior glue, applied horizontally or vertically to the steel studs. Vertical joints centered on studs, and staggered one stud space from wallboard joints. Attached to studs with flat-head self-drilling tapping screws with a min. head diam. of 0.292 in. at maximum 6 in. OC. at the perimeter and 12 in. OC. in the field. When used, fastener lengths for gypsum panels increased by min. 1/2 in.

4. Batts and Blankets* — (Required as indicated under Item 5) — Mineral wool batts, friction fitted between studs and runners. Min nom thickness as indicated under Item 5. See **Batts and Blankets (BKNV or BZJZ) Categories** for names of Classified companies.

4A. Batts and Blankets* — (Optional) — Placed in stud cavities, any glass fiber or mineral wool insulation bearing the UL Classification Marking as to Surface Burning Characteristics and/or Fire Resistance. See **Batts and Blankets (BKNV or BZJZ) Categories** for names of Classified companies.

5. Gypsum Board* — Gypsum panels with beveled, square or tapered edges, applied vertically or horizontally. Vertical joints centered over studs and staggered one stud cavity on opposite sides of studs. Vertical joints in adjacent layers (multilayer systems) staggered one stud cavity. Horizontal joints need not be backed by steel framing. Horizontal edge joints and horizontal butt joints on opposite sides of studs need not be staggered. Horizontal edge joints and horizontal butt joints in adjacent layers (multilayer systems) staggered a min of 12 in. The thickness and number of layers for the 1 hr, 2 hr, 3 hr and 4 hr ratings are as follows:

Gypsum Board Protection on Each Side of Wall

Rating, Hr	Min Stud Depth, in. (Items 2, 2B, and 2G)	Min Stud Depth, in. (Item 2A)	No. of Layers & Thkns of Panel	Min Thkns of Insulation (Item 4)
1	3-1/2	3-5/8	1 layer, 5/8 in. thick	Optional
1	2-1/2	3-5/8	1 layer, 1/2 in. thick	1-1/2 in.
1	1-5/8	3-5/8	1 layer, 3/4 in. thick	Optional
2	1-5/8	2-1/2	2 layers, 1/2 in. thick	Optional
2	1-5/8	2-1/2	2 layers, 5/8 in. thick	Optional
2	3-1/2	3-5/8	1 layer, 3/4 in. thick	3 in.
3	1-5/8	2-1/2	3 layers, 1/2 in. thick	Optional
3	1-5/8	2-1/2	2 layers, 3/4 in. thick	Optional
3	1-5/8	2-1/2	3 layers, 5/8 in. thick	Optional
4	1-5/8	2-1/2	4 layers, 5/8 in. thick	Optional
4	1-5/8	2-1/2	4 layers, 1/2 in. thick	Optional
4	2-1/2	2-1/2	2 layers, 3/4 in. thick	2 in.

CANADIAN GYPSUM COMPANY — 1/2 in. thick Type C, IP-X2 or IPC-AR; WRC, 5/8 in. thick Type AR, C, IP-AR, IP-X1, IP-X2, IPC-AR, SCX, SHX, WRX or WRC; 3/4 in. thick Types IP-X3 or ULTRACODE

UNITED STATES GYPSUM CO — 1/2 in. thick Type C, IP-X2, IPC-AR or WRC; 5/8 in. thick Type SCX, SHX, WRX, IP-X1, AR, C, WRC, FRX-G, IP-AR, IP-X2, IPC-AR ; 3/4 in. thick Types IP-X3 or ULTRACODE

USG MEXICO S A DE C V — 1/2 in. thick Type C, IP-X2, IPC-AR or WRC; 5/8 in. thick Type AR, C, IP-AR, IP-X1, IP-X2, IPC-AR, SCX, SHX, WRX, WRC or; 3/4 in. thick Types IP-X3 or ULTRACODE

When Item 7B, Steel Framing Members*, is used, Nonbearing Wall Rating is limited to 1 Hr. Min. stud depth is 3-1/2 in., min. thickness of insulation (Item 4) is 3 in., and two layers of gypsum board panels (1/2 in. or 5/8 in. thick) shall be attached to furring channels as described in Item 6. One layer of gypsum board panels (1/2 in. or 5/8 in. thick) attached to opposite side of stud without furring channels as described in Item 6.

5A. Gypsum Board* — (As an alternate to Item 5) — 5/8 in. thick, 24 to 54 in. wide, applied horizontally as the outer layer to one side of the assembly. Secured as described in Item 6.

CANADIAN GYPSUM COMPANY — Type SHX.

UNITED STATES GYPSUM CO — Type FRX-G, SHX.

USG MEXICO S A DE C V — Type SHX.

5B. Gypsum Board* — (Not Shown) - As an alternate to Item 5 when used as the base layer on one or both sides of wall when 5/8 in or ¾ in. thick products are specified. For direct attachment only to steel studs Item 2B, (not to be used with Item 3) - Nom 5/8 in. or ¾ in. may be used as alternate to all 5/8 in. or ¾ in. shown in Item 5, Wallboard Protection on Each Side of Wall table. Nom 5/8 in. or ¾ in. thick lead backed gypsum panels with beveled, square or tapered edges, applied vertically. Vertical joints centered over studs and staggered min 1 stud cavity on opposite sides of studs. Gypsum board secured to 20 MSG steel studs Item 2B with 1-1/4 in. long Type S-12 steel screws spaced 8 in. OC at perimeter and 12 in. OC in the field. To be used with Lead Batten Strips (see Item 11) or Lead Discs or Tabs (see Item 12).

RAY-BAR ENGINEERING CORP — Type RB-LBG

5C. Gypsum Board* — (For Use With Item 2C) Rating Limited to 1 Hour. 5/8 in. thick, 48 in. wide. Gypsum panels with beveled, square or tapered edges, applied vertically or horizontally. (Vertical Application) - The gypsum board is to be installed on each side of the studs with 1 in. long Type S coated steel screws spaced 8 in. OC starting 4 in. from the edge of the board at the vertical edges and 12 in. OC starting 6 in. from the edge of the board at the center of each board. Gypsum boards are to be secured to the top and bottom track with screws spaced 8 in. OC starting 4 in. from the board edge. Fasteners shall not penetrate through both the stud and the track at the same time. Vertical joints are to be centered over studs and staggered one stud cavity on opposite sides of studs. (Horizontal Application) - The gypsum board is to be installed on each side of the studs with 1 in. long Type S coated steel screws spaced 8 in. OC starting 4 in. from the edge of the board at the vertical edges and 12 in. OC starting 6 in. from the edge of the board at the center of each board. Gypsum boards are to be secured to the top and bottom track with screws spaced 8 in. OC starting 4 in. from the board edge. Fasteners shall not penetrate through both the stud and the track at the same time. All horizontal joints are to be backed as outlined under section VI of Volume 1 in the Fire Resistance Directory.

CANADIAN GYPSUM COMPANY — Type SCX.

UNITED STATES GYPSUM CO — Type SCX.

USG MEXICO S A DE C V — Type SCX.

5D. Gypsum Board* — (As an alternate to Item 5) — 5/8 in. thick, 48 in. wide, applied vertically or horizontally. Secured as described in Item 6. For use with Items 1 and 2 only.

UNITED STATES GYPSUM CO — Type USGX.

5E. Gypsum Board* — (Not Shown) - (As an alternate to Item 5 when used as the base layer on one or both sides of wall when 1/2 in. or 5/8 in thick products are specified. For direct attachment only to steel studs Item 2B, not to be used with Item 3). Nominal 5/8 in. thick lead backed gypsum panels with beveled, square or tapered edges, applied vertically. Vertical joints centered over studs and staggered min 1 stud cavity on opposite sides of studs. Wallboard secured to studs with 1-1/4 in. long Type S-12 (or No. 6 by 1-1/4 in. long bugle head fine drilled) steel screws spaced 8 in. OC at perimeter and 12 in. OC in the field.

NEW ENGLAND LEAD BURNING CO INC, DBA

NELCO — Nelco

5F. Gypsum Board* — (As an alternate to Item 5) — For use with Items 1G and 2F and 5G, 1 Hour Rating only. Gypsum panels with beveled, square or tapered edges, applied vertically, as specified in the table below. Vertical joints centered over studs and staggered one stud cavity on opposite sides of studs. Steel stud depth shall be a minimum 3-5/8 in.

UNITED STATES GYPSUM CO — Type SCX.

staggered one stud cavity on opposite sides of studs. Vertical joints in adjacent layers (multilayer systems) staggered one stud cavity. Horizontal joints need not be backed by steel framing. Horizontal edge joints and horizontal butt joints on opposite sides of studs need not be staggered. Horizontal edge joints and horizontal butt joints in adjacent layers (multilayer systems) staggered a min of 12 in. The thickness and number of layers for the 2 hr, 3 hr and 4 hr ratings are as follows:

Gypsum Board Protection on Each Side of Wall

Rating, Hr	Min Stud Depth, in. (Item 2F)	No. of Layers & Thickness of Panel	Min Thkns of Insulation (Item 4)
2	1-5/8	2 layers, 1/2 in. thick	Optional
2	1-5/8	2 layers, 5/8 in. thick	Optional
3	1-5/8	3 layers, 1/2 in. thick	Optional
3	1-5/8	3 layers, 5/8 in. thick	Optional
4	1-5/8	4 layers, 5/8 in. thick	Optional
4	1-5/8	4 layers, 1/2 in. thick	Optional

CANADIAN GYPSUM COMPANY — 1/2 in. thick Type C, IP-X2 or IPC-AR; 5/8 in. thick Type AR, C, IP-AR, IP-X1, IP-X2, IPC-AR, SCX, SHX, or; 3/4 in. thick Types IP-X3 or ULTRACODE

UNITED STATES GYPSUM CO — 1/2 in. thick Type C, IP-X2, IPC-AR or; 5/8 in. thick Type SCX, SHX, IP-X1, AR, C, , FRX-G, IP-AR, IP-X2, IPC-AR ; 3/4 in. thick Types IP-X3 or ULTRACODE

USG MEXICO S A DE C V — 1/2 in. thick Type C, IP-X2, IPC-AR or; 5/8 in. thick Type AR, C, IP-AR, IP-X1, IP-X2, IPC-AR, SCX, SHX, or; 3/4 in. thick Types IP-X3 or ULTRACODE

6. Fasteners — (Not shown) — For use with Items 2 and 2F — Type S or S-12 steel screws used to attach panels to studs (Item 2) or furring channels (Item 7). **Single layer systems:** 1 in. long for 1/2 and 5/8 in. thick panels or 1-1/4 in. long for 3/4 in. thick panels, spaced 8 in. OC when panels are applied horizontally, or 8 in. OC along vertical and bottom edges and 12 in. OC in the field when panels are applied vertically. **Two layer systems:** First layer- 1 in. long for 1/2 and 5/8 in. thick panels or 1-1/4 in. long for 3/4 in. thick panels, spaced 16 in. OC. Second layer- 1-5/8 in. long for 1/2 in., 5/8 in. thick panels or 2-1/4 in. long for 3/4 in. thick panels, spaced 16 in. OC with screws offset 8 in. from first layer. **Three-layer systems:** First layer- 1 in. long for 1/2 in., 5/8 in. thick panels, spaced 24 in. OC. Second layer- 1-5/8 in. long for 1/2 in., 5/8 in. thick panels, spaced 24 in. OC. Third layer- 2-1/4 in. long for 1/2 in., 5/8 in. thick panels or 2-5/8 in. long for 5/8 in. thick panels, spaced 12 in. OC. Screws offset min 6 in. from layer below. **Four-layer systems:** First layer- 1 in. long for 1/2 in., 5/8 in. thick panels, spaced 24 in. OC. Second layer- 1-5/8 in. long for 1/2 in., 5/8 in. thick panels, spaced 24 in. OC. Third layer- 2-1/4 in. long for 1/2 in. thick panels or 2-5/8 in. long for 5/8 in. thick panels, spaced 24 in. OC. Fourth layer- 2-5/8 in. long for 1/2 in. thick panels or 3 in. long for 5/8 in. thick panels, spaced 12 in. OC. Screws offset min 6 in. from layer below.

6A. Fasteners — (Not shown) —For use with Item 2A - Type S or S-12 steel screws used to attach panels to studs (Item 2A). **Single layer systems:** 1 in. long for 1/2 and 5/8 in. thick panels or 1-1/4 in. long for 3/4 in. thick panels, spaced 8-1/2 in. OC with additional screws 1 in. and 2-1/2 in. from edges of the board when panels are horizontally, or 8 in. OC along vertical and bottom edges and 12 in. OC in the field when panels are applied vertically. **Two layer systems applied vertically:** First layer- 1 in. long for 1/2 and 5/8 in. thick panels or 1-1/4 in. long for 3/4 in. thick panels, spaced 16 in. OC. Second layer- 1-5/8 in. long for 1/2 in., 5/8 in. thick panels or 2-1/4 in. long for 3/4 in. thick panels, spaced 16 in. OC with screws offset 8 in. from first layer. **Two layer systems applied horizontally:** First layer- 1 in. long for 1/2 and 5/8 in. thick panels or 1-1/4 in. long for 3/4 in. thick panels, spaced 16 in. OC starting 8 in. from each edge of the board with an additional screw placed 1-1/4 in. from each edge of the board. Second layer- 1-5/8 in. long for 1/2 in., 5/8 in. thick panels or 2-1/4 in. long for 3/4 in. thick panels, spaced 16 in. OC starting 8 in. from each edge of the board with an additional screw placed 1-1/4 in. from each edge of the board with screws offset 8 in. from first layer. **Three-layer systems:** First layer- 1 in. long for 1/2 in., 5/8 in. thick panels, spaced 24 in. OC. Second layer- 1-5/8 in. long for 1/2 in., 5/8 in. thick panels, spaced 24 in. OC. Third layer- 2-1/4 in. long for 1/2 in., 5/8 in. thick panels or 2-5/8 in. long for 5/8 in. thick panels, spaced 12 in. OC. Screws offset min 6 in. from layer below. For all layers, an additional screw shall be placed 1-1/4 in. from each edge of the board. **Four-layer systems:** First layer- 1 in. long for 1/2 in., 5/8 in. thick panels, spaced 24 in. OC. Second layer- 1-5/8 in. long for 1/2 in., 5/8 in. thick panels, spaced 24 in. OC. Third layer- 2-1/4 in. long for 1/2 in. thick panels or 2-5/8 in. long for 5/8 in. thick panels, spaced 24 in. OC. Fourth layer- 2-5/8 in. long for 1/2 in. thick panels or 3 in. long for 5/8 in. thick panels, spaced 12 in. OC. Screws offset min 6 in. from layer below. For all layers, an additional screw shall be placed 1-1/4 in. from each edge of the board.

7. Furring Channels — (Optional, not shown, for single or double layer systems) — Resilient furring channels fabricated from min 25 MSG corrosion-protected steel, spaced vertically a max of 24 in. OC. Flange portion attached to each intersecting stud with 1/2 in. long Type S-12 steel screws. Not for use with Item 5A and 5F.

7A. Framing Members* — (Not Shown) — (Optional on one or both sides, not shown, for single or double layer systems) — As an alternate to Item 7, furring channels and Steel Framing Members as described below:

a. **Furring Channels** — Formed of No. 25 MSG galv steel, 2-3/8 in. wide by 7/8 in. deep, spaced max.

24 in. OC perpendicular to studs. Channels secured to studs as described in Item b. Gypsum board attached to furring channels as described in Item 6. Not for use with Item 5A and 5E.

b. **Steel Framing Members*** — Used to attach furring channels (Item 7Aa) to studs (Item 2). Clips spaced max. 48 in. OC. RSIC-1 clips secured to studs with No. 8 x 1-1/2 in. minimum self-drilling, S-12 steel screw through the center grommet. RSIC-V clips secured to studs with No. 8 x 5/16 in. minimum self-drilling, S-12 steel screw through the center hole. Furring channels are friction fitted into clips.

PAC INTERNATIONAL INC — Types RSIC-1, RSIC-V.

7B. Framing Members* — (Optional, Not Shown) — As an alternate to Item 7, for single or double layer systems, furring channels and Steel Framing Members on only one side of studs as described below:

a. **Furring Channels** — Formed of No. 25 MSG galv steel, spaced 24 in. OC perpendicular to studs. Channels secured to studs as described in Item b. Batts and Blankets placed in stud cavity as described in Item 5. Two layers of gypsum board attached to furring channels as described in Item 5. Not for use with Item 5A and 5E.

b. **Steel Framing Members*** — Used to attach furring channels (Item 7Ba) to one side of studs (Item 2) only. Clips spaced 48 in. OC., and secured to studs with two No. 8 x 1-1/2 in. coarse drywall screws, one through the hole at each end of the clip. Furring channels are friction fitted into clips.

KINETICS NOISE CONTROL INC — Type Isomax

7C. Framing Members* — Optional - Not Shown - Used as an alternate method to attach resilient channels (Item 7). Clips attached at each intersection of the resilient channel and the steel studs (Item 2). Resilient channels are friction fitted into clips, and then clips are secured to the steel stud with min. 1 in. long Type S-12 steel screws through the center hole of the clip and the resilient channel flange.

KEENE BUILDING PRODUCTS CO INC — Type RC Assurance.

8. Joint Tape and Compound — Vinyl or casein, dry or premixed joint compound applied in two coats to joints and screw heads of outer layers. Paper tape, nom 2 in. wide, embedded in first layer of compound over all joints of outer layer panels. Paper tape and joint compound may be omitted when gypsum panels are supplied with a square edge.

9. Siding, Brick or Stucco — (Optional, not shown) — Aluminum, vinyl or steel siding, brick veneer or stucco, meeting the requirements of local code agencies, installed over gypsum panels. Brick veneer attached to studs with corrugated metal wall ties attached to each stud with steel screws, not more than each sixth course of brick.

10. Caulking and Sealants* — (Optional, not shown) — A bead of acoustical sealant applied around the partition perimeter for sound control.

UNITED STATES GYPSUM CO — Type AS

11. Lead Batten Strips — (Not Shown, For Use With Item 5B) - Lead batten strips, min 1-1/2 in. wide, max 10 ft long with a max thickness of 0.125 in. Strips placed on the interior face of studs and attached from the exterior face of the stud with two 1 in. long Type S-12 pan head steel screws, one at the top of the strip and one at the bottom of the strip. Lead batten strips to have a purity of 99.9% meeting the Federal Specification QQ-L-201f, Grade "C". Lead batten strips required behind vertical joints of lead backed gypsum wallboard (Item 5B) and optional at remaining stud locations. Required behind vertical joints.

12. Lead Discs or Tabs — (Not Shown, For Use With Item 5B) - Used in lieu of or in addition to the lead batten strips (Item 11) or optional at other locations - Max 3/4 in. diam by max 0.125 in. thick lead discs compression fitted or adhered over steel screw heads or max 1/2 in. by 1-3/4 in. by max 0.125 in. thick lead tabs placed on gypsum boards (Item 5B) underneath screw locations prior to the installation of the screws. Lead discs or tabs to have a purity of 99.9% meeting the Federal specification QQ-L-201f, Grade "C".

13. Lead Batten Strips — (Not Shown, For Use With Item 5E) Lead batten strips, 2 in. wide, max 10 ft long with a max thickness of 0.142 in. Strips placed on the face of studs and attached to the stud with two min. 1 in. long min. Type S-8 pan head steel screws, one at the top of the strip and one at the bottom of the strip or with one min. 1 in. long min. Type S-8 pan head steel screw at the top of the strip. Lead batten strips to have a purity of 99.9% meeting the Federal specification QQ-L-201f, Grade "C". Lead batten strips required behind vertical joints of lead backed gypsum wallboard (Item 5E) and optional at remaining stud locations.

14. Lead Tabs — (Not Shown, For Use With Item 5E) 2 in. wide, 5 in. long with a max thickness of 0.142 in. Tabs friction-fit around front face of stud, the stud folded back flange, and the back face of the stud. Tabs required at each location where a screw (that secures the gypsum boards, Item 5E) will penetrate the steel stud. Lead tabs to have a purity of 99.9% meeting the Federal specification QQ-L-201f, Grade "C". Lead tabs may be held in place with standard adhesive tape if necessary.

*Bearing the UL Classification Mark

Last Updated on 2010-02-18

System No. W-L-1248

May 22, 2001

F Rating — 1 Hr

T Rating — 0 Hr

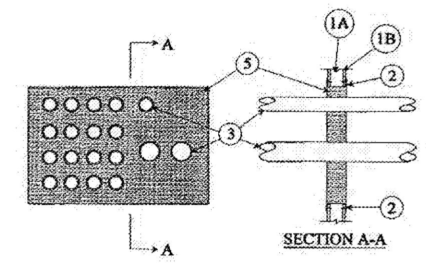

1. Wall Assembly — The fire-rated gypsum wallboard/stud wall assembly shall be constructed of the materials and in the manner specified in the individual U300 or U400 Series Wall and Partition Designs in the UL Fire Resistance Directory and shall include the following construction features:

A. **Studs** — Wall framing may consist of either wood studs or steel channel studs. Wood studs to consist of nom 2 by 4 in. lumber spaced 16 in. OC. Steel studs to be min 3-5/8 in. wide and spaced max 24 in. OC. Additional framing members to be installed in stud cavity containing the through penetrating item to form a rectangular box around the penetrants.

B. **Gypsum Board*** — One layer of nom 5/8 in. thick gypsum wallboard, as specified in the individual Wall and Partition Design. Max area of opening is 1024 sq in. with max dimension of 32 in. for steel stud walls. Max width of opening in wood stud walls is limited to 14-1/2 in.

2. Angle Clips — Nom 1-1/2 in. by 1-1/2 in. by No. 22 gauge (or heavier) steel angles attached to all four sides of the opening on both sides of the wall. The angle shall be attached to the wall with min 1-5/8 in. long Type S self-drilling, self-tapping bugle-head steel screws spaced max of 2 in. from each end and at a max 6 in. OC.

3. Through Penetrants — The space between pipes, conduits or tubing shall be min 1 in. when diam of through penetrant is 1-1/2 in. or smaller and 2-1/2 in. when diam of through penetrant is larger than 1-1/2 in. The space between pipes, conduits or tubing and periphery of opening shall be min 1 in. when diam of through penetrant is 1-1/2 in. or smaller and 2-1/2 in. when diam of through penetrant is larger than 1-1/2 in. Pipe, conduit or tubing to be rigidly supported on both sides of wall assembly. The following types and sizes of metallic pipes, conduits or tubing may be used:

A. **Steel Pipe** — Nom 8 in. diam (or smaller) Schedule 10 (or heavier) steel pipe.

B. **Iron Pipe** — Nom 8 in. diam (or smaller) cast or ductile iron pipe.

C. **Conduit** — Nom 8 in. diam (or smaller) steel conduit or nom 4 in. diam (or smaller) steel electrical metallic tubing.

D. **Copper Tubing** — Nom 3 in. diam (or smaller) Type L (or heavier) copper tubing.

E. **Copper Pipe** — Nom 3 in. diam (or smaller) Regular (or heavier) copper pipe.

4. Forms — (Not Shown) — Used as a form to prevent leakage of fill material during installation. Forms to be a rigid sheet material, cut to fit the contour of the penetrating items and fastened to both sides of wall. forms to be removed after fill material has cured.

5. Fill, Void or Cavity Material*—Mortar — Min 4-1/2 in. thickness of fill material applied within the annulus, centered within the wall. Mortar is mixed at a rate of 2-1/2 parts dry mix to on part water by volume in accordance with the fill material manufacturer's installation instructions.
HILTI CONSTRUCTION CHEMICALS, DIV OF HILTI INC — CP637 Mortar

*** Indicates such products shall bear the UL or cUL Certification Mark for jurisdictions employing the UL or cUL Certification (such as Canada), respectively.**

Last Updated on 2001-05-22

System No. W-L-2284

April 22, 2005

F Rating — 1 Hr

T Rating — 1 Hr

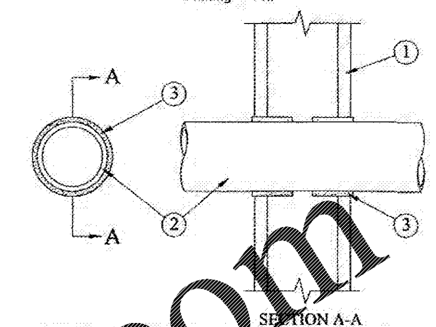

1. Wall Assembly — The 1 hr fire-rated gypsum board/stud wall assembly shall be constructed of the materials and in the manner specified in the individual U300 or U400 Series Wall and Partition Designs in the UL Fire Resistance Directory and shall include the following construction features:

A. **Studs** — Wall framing shall consist of wood studs or steel channel studs. Wood studs to consist of 2 by 4 in. lumber spaced 16 in. OC. Steel studs to be min 3-1/2 in. wide and spaced max 24 in. OC.

B. **Gypsum Board*** — Min 5/8 in. thick, 4 ft wide with square or tapered edges. The gypsum wallboard type, thickness, number of layers and orientation shall be as specified in the individual U300 or U400 Wall and Partition Design. Max diam of opening is 4 in.

2. Through Penetrants — One nonmetallic pipe to be centered within the firestop system. An annular space of min 1/4 in. is required within the firestop system. Pipe to be rigidly supported on both sides of wall assembly. The following types and sizes of nonmetallic pipes may be used:

A. **Polyvinyl Chloride (PVC) Pipe** — Nom 3 in. diam (or smaller) Schedule 40 solid or cellular core PVC pipe for use in closed (process or supply) or vented (drain, waste or vent) piping systems.

B. **Chlorinated Polyvinyl Chloride (CPVC) Pipe** — Nom 3 in. diam (or smaller) SDR 13.5 CPVC pipe for use in closed (process or supply) piping systems.

3. Fill, Void or Cavity Material* — Wrap Strip - Layers of intumescent wrap strip are continuously wrapped around the pipe with ends held in place with tape. Wrap strip installed such that ends protrude nom. 1/8 in. beyond both surfaces of wall. Size of wrap strip and number of layers are shown in table below.
HILTI CONSTRUCTION CHEMICALS, DIV OF HILTI INC — CP648-E W25/1" or CP648-E W45/1-3/4" Firestop Wrap Strip

Product Designation	Pipe Diameter (in.)	Number of Layers	Nom. Wrap Strip Width (in.)
CP648-E-W25/1"	1-1/2 and 2	1	1
CP648-E-W45/1-3/4"	1-1/2, 2 and 3	1	1-3/4

A. **Fill, Void or Cavity Material* - Wrap Strip** — (As an alternate to the wrap strip in Item 3) - One layer of intumescent wrap strip is tightly wrapped around the pipe with ends butted and held in place with integrated tape. Wrap strip installed such that ends protrude nom. 1/8 in. beyond both surfaces of wall.
HILTI CONSTRUCTION CHEMICALS, DIV OF HILTI INC — CP648-S-1.5" US, CP648-S-2" US, CP648-S-3" US

*** Indicates such products shall bear the UL or cUL Certification Mark for jurisdictions employing the UL or cUL Certification (such as Canada), respectively.**

Last Updated on 2005-04-22

Order Plans @ www.DLine.com

CALIBER COLLISION

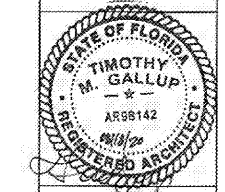

timothy m. gallup
architect of record
801 S. Boulder Ave., Suite 808
Tulsa, Oklahoma 74119
918.949.0600

copyright © 2020 by timothy m. gallup

NO.	DATE	BY	DESCRIPTION

REVISIONS

UL ASSEMBLY DETAILS - PENETRATIONS

CALIBER COLLISION

2100 GRIFFIN RD
LAKELAND, FL
PROJECT NO. 202002

FILE NAME: 202002
DRAWN BY:
DATE: 08/19/2020
REVIEWED BY: TMG

A3.7