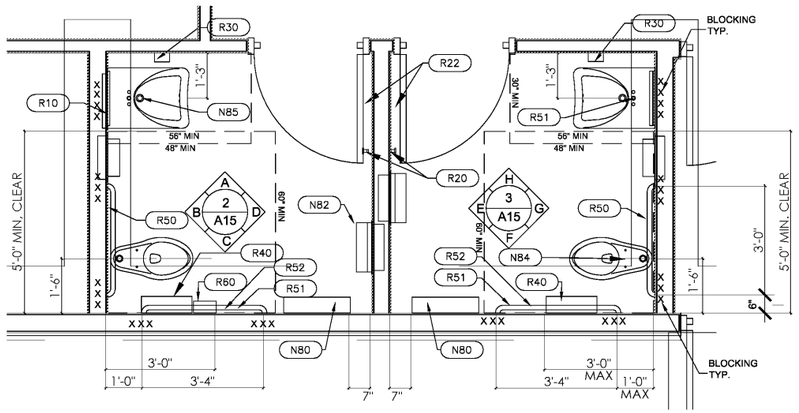

1 A15 ENLARGED RESTROOM PLAN
1/2"=1'-0"

WALL TILE INSTALLATION NOTES

1) INSTALL PINOT GOLD MEUNIER TILE, T-3, FROM TOP OF COVE BASE TO 4'-10" AFF. PROVIDE FOUR ROWS OF THE TILE AS THE CONTROL.

2) INSTALL MARDI GRAS CARNIVAL MOSAIC TILE, M-2, ABOVE FIELD TILE; ONE 12" ROW CUT TO 6" HEIGHT BEFORE INSTALLATION (6" BAND).

3) FLOAT MARDI GRAS CARNIVAL MOSAIC TILE, M-2, TO DEPTH OF PINOT GOLD MEUNIER TILE, T-3.

4) INSTALL ONE ROW OF THE BULL NOSE PINOT GOLD MEUNIER TILE, T-4, ABOVE TOP OF MARDI GRAS CARNIVAL MOSAIC.

5) SEAL ALL WALL TILE GROUT JOINTS WITH EPOXY GROUT.

HAND SINK ASSEMBLY:

HAND SINK
MANUF: AMERICAN STANDARD
MODEL: 9141.001 FAUCET HOLES ON 4" CENTERS
COLOR: WHITE

FAUCET
MANUF: AMERICAN STANDARD
MODEL: 8123F
FAUCET FINISH: POLISHED CHROME
TRAP SIZE: 1 1/4"

DRAIN BOOT
MANUF: PLUMBEREX TRAP GEAR
MODEL: 396W

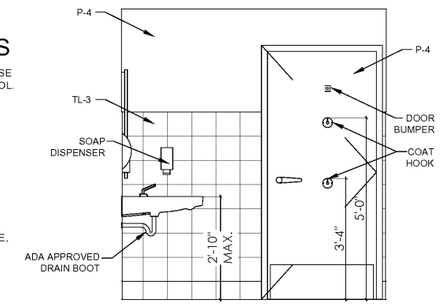

A

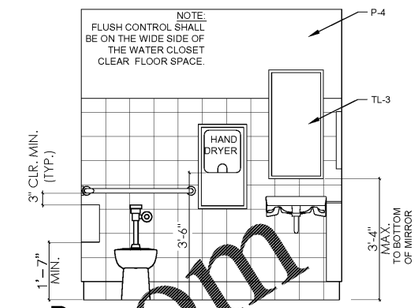

B

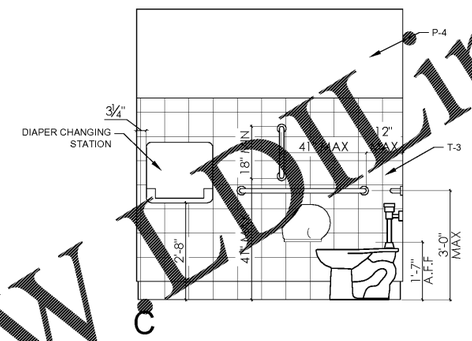

C

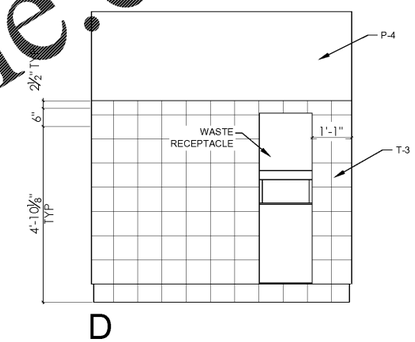

D

2 A15 ELEVATIONS @ WOMEN'S RESTROOM
1/2"=1'-0"

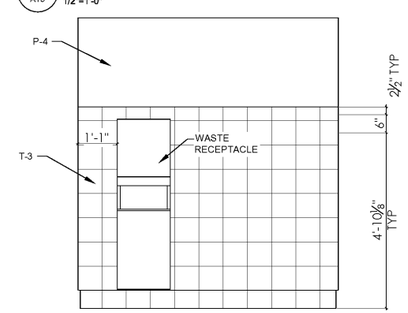

E

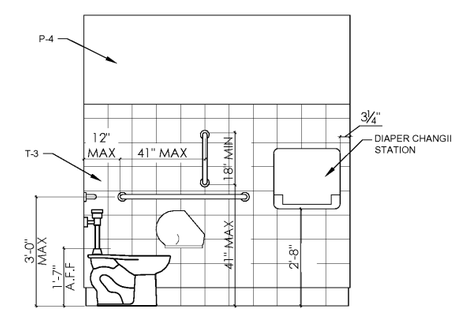

F

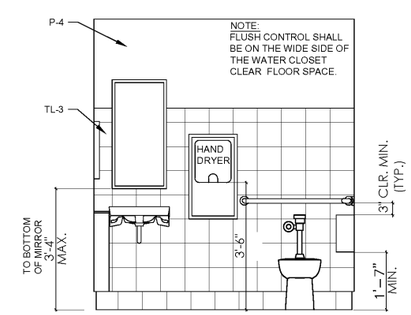

G

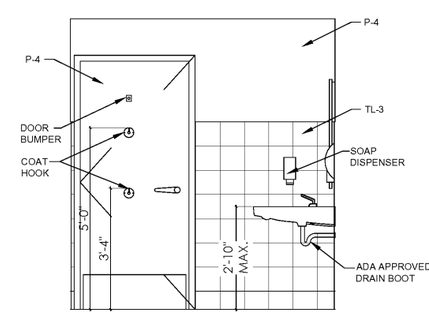

H

3 A15 ELEVATIONS @ MEN'S RESTROOM
1/2"=1'-0"

RESTROOM ACCESSORIES SCHEDULE

QUANTITY	ITEM	
2	R10	WALL MOUNTED MIRROR, CHANNEL FRAME 18"x36" - GAMCO C-18x36
3	R20	SURFACE-MOUNTED DOOR BUMPER - BOBRICK B-6877
6	R22	HEAVY DUTY CLOTHES HOOK - BOBRICK B-2116
2	R30	SOAP DISPENSER, SURFACE MOUNT - BOBRICK B-4112 (OPTIONAL)
2	R40	ROLL TOILET TISSUE DISPENSER - BOBRICK B-2890
2	R50	GRAB BAR, STRAIGHT, SNAP FLANGE, 36" - GAMCO 150-S x 36"
2	R51	GRAB BAR, STRAIGHT, SNAP FLANGE, 42" - GAMCO 150-S x 42"
2	R52	GRAB BAR, STRAIGHT, SNAP FLANGE, 18" - GAMCO 150-S x18"
1	R60	SANITARY NAPKIN DISPOSAL, SURFACE MOUNT - BOBRICK B-270
2	N80	BABY CHANGING STATION, SURFACE MOUNT - KOALA KARE KB100-00
2	N81	AMERICAN STANDARD 8123F CENTERSET LAVATORY FAUCET
2	N82	RECESSED ROLL TOWEL DISPENSER AND WASTE RECEPTACLE, BOBRICK B-43944
2	N84	TOILET, FLOOR MOUNT, SENSOR FLUSH - AMERICAN STANDARD 3043.102
2	N85	AMERICAN STANDARD HAND SINK 9141.001
		ALL RESTROOM ACCESSORIES FURNISHED AND INSTALLED BY CONTRACTOR, EXCEPT SOAP DISPENSER.

SPECIFICATIONS:

DIVISION 10: SPECIALTIES
SECTION 10A: TOILET ACCESSORIES
GENERAL PROVISIONS

1. SCOPE: INSTALL TOILET PARTITIONS WHERE APPLICABLE, TOILET ACCESSORIES, AND RELATED HARDWARE AS SHOWN ON PLANS OR INSTALLATION DRAWINGS.

2. SUBMISSIONS: PROVIDE INSTALLATION DRAWINGS TO OWNER'S REPRESENTATIVE SHOWING THE SIZE AND LOCATION OF EACH COMPONENT AND ROUGH OPENING SIZES AND MOUNTING HEIGHTS. LABEL ALL COMPONENTS TO CORRESPOND TO INSTRUCTIONS FOR EASE OF INSTALLATION.

MATERIALS

1. DOORS FOR TOILET COMPARTMENTS WHERE APPLICABLE WITH STUD WALL PARTITIONS SHALL BE 3/4" X 58" HIGH TOILET STALL DOORS WITH STANDARD HINGES #502 CATCH SLIDE SURFACE STRIKE #5140 FOR OUTSWINGING DOORS, AND #6260 SURFACE STRIKE FOR IN-SWINGING DOORS, COAT HOOK WITH RUBBER BUMPER AT EACH O.C.

2. STALL DOOR HINGE JAMB: 1-1/4" X 1-1/4" X 8'-0" MILL FINISH ALUMINUM TUBE HINGE JAMB POST FOR TOILET STALL DOORS. PRE-DRILL FOR #12 SCREWS @ 8" O.C.

3. PANELIZED TOILET COMPARTMENTS & DOORS (WHEN SHOWN) SHALL BE MARLITE FLOOR-MOUNTED, OVERHEAD-BRACED TOILET PARTITIONS AND /OR FLOOR-MOUNTED, CEILING-BRACED URINAL SCREEN BY MARLITE WITH STAINLESS STEEL PILASTER SHOE COVERS. FINISH 927 FOLKSTONE (GRAY), MCP LAMINATE. DOORS TO HAVE COAT HOOK WITH RUBBER BUMPER.

4. ACCESSORIES REFER TO DRAWINGS.

PERFORMANCE

1. INSTALL PARTITIONS, ACCESSORIES, AND HARDWARE IN ACCORDANCE WITH MANUFACTURER'S RECOMMENDATIONS AND INSTALLATION DRAWINGS.

ALL DIMENSIONS THIS SHEET ARE FROM FINISHES

ACCESSIBILITY NOTES: ADA/ANSI A117.1

1. THE INTERNATIONAL SYMBOL OF ACCESSIBILITY SIGN SHALL BE DISPLAYED AT ALL ACCESSIBLE RESTROOM FACILITIES AND AT ACCESSIBLE BUILDING ENTRANCES UNLESS ALL ENTRANCES ARE ACCESSIBLE. INACCESSIBLE ENTRANCES SHALL HAVE DIRECTIONAL SIGNS INDICATING THE ROUTE TO THE NEAREST ACCESSIBLE ENTRANCE.

2. RECEPTACLES ON WALLS SHALL BE MOUNTED NO LESS THAN 15" ABOVE THE FLOOR. EXCEPTION: HEIGHT LIMITATIONS DO NOT APPLY WHERE THE USE OF SPECIAL EQUIPMENT DICTATES OTHERWISE OR WHERE ELECTRICAL RECEPTACLES ARE NOT NORMALLY INTENDED FOR USE BY BUILDING OCCUPANTS.

3. WHERE EMERGENCY WARNING SYSTEMS ARE PROVIDED, THEY SHALL INCLUDE BOTH AUDIBLE AND VISUAL ALARMS. THE VISUAL ALARMS SHALL BE LOCATED THROUGHOUT, INCLUDING RESTROOMS, AND PLACED 80" ABOVE THE FLOOR OR 6" BELOW CEILING, WHICHEVER IS LOWER.

4. DOORS TO ALL ACCESSIBLE SPACES SHALL HAVE ACCESSIBLE HARDWARE (i.e. LEVER-OPERATED, PUSH-TYPE, U-SHAPED) MOUNTED NO HIGHER THAN 48" ABOVE THE FLOOR.

5. FLOOR SURFACES SHALL BE STABLE, FIRM, AND SLIP-RESISTANT. CHANGES IN LEVEL BETWEEN 0.25" AND 0.5" SHALL BE BEVELED WITH A SLOPE NO GREATER THAN 1:2". CHANGES IN LEVEL GREATER THAN 0.5" REQUIRE RAMPS. CARPET PILE THICKNESS SHALL BE 0.5" MAX. GRATINGS IN FLOOR SHALL HAVE SPACES NO GREATER THAN 0.5" WIDE IN ONE DIRECTION. DOORWAY THRESHOLDS SHALL NOT EXCEED 0.5" IN HEIGHT.

6. GRAB BARS REQUIRED FOR ACCESSIBILITY SHALL BE 1.25"-1.50" IN DIAMETER WITH 1.5" CLEAR SPACE BETWEEN THE BAR AND THE WALL.

7. ACCESSIBLE WATER CLOSETS SHALL BE 17"-19" FROM FLOOR TO THE TOP OF THE SEAT. GRAB BARS SHALL BE 36" LONG MINIMUM WHEN LOCATED BEHIND WATER CLOSET AND 42" MINIMUM WHEN LOCATED ALONG SIDE OF WATER CLOSET, AND SHALL BE MOUNTED 33"-36" ABOVE THE FLOOR.

8. ACCESSIBLE URINALS SHALL BE STALL-TYPE OR WALL HUNG WITH ELONGATED RIMS AT A MAXIMUM OF 17" ABOVE THE FLOOR.

9. ACCESSIBLE LAVATORIES SHALL BE MOUNTED WITH THE RIM NO HIGHER THAN 34" ABOVE THE FLOOR AND A CLEARANCE OF AT LEAST 29" ABOVE THE FLOOR TO THE BOTTOM OF THE APRON.

10. ACCESSIBLE SINKS SHALL BE MOUNTED WITH THE RIM NO HIGHER THAN 34" ABOVE THE FLOOR AND A CLEARANCE OF AT LEAST 27" HIGH, 30" WIDE, AND 19" DEEP UNDERNEATH SINK. THE SINK DEPTH SHALL BE 6.5" MAXIMUM.

11. HOT WATER AND DRAIN PIPES UNDER ACCESSIBLE LAVATORIES AND SINKS SHALL BE INSULATED OR OTHERWISE CONFIGURED TO PROTECT AGAINST CONTACT. THERE SHALL BE NO SHARP OR ABRASIVE SURFACES UNDER

12. ACCESSIBLE LAVATORIES AND SINKS. ACCESSIBLE LAVATORIES AND SINKS SHALL HAVE ACCESSIBLE FAUCETS (i.e. LEVER-OPERATED, PUSH-TYPE, ELECTRONICALLY CONTROLLED.)

13. WHERE MIRRORS ARE PROVIDED IN RESTROOM, AT LEAST ONE SHALL BE PROVIDED WITH THE BOTTOM EDGE OF THE REFLECTIVE SURFACE NO HIGHER THAN 40" ABOVE THE FLOOR.

ARCHITECTURE, ENGINEERING, PC SHALL RETAIN ALL COMMON LAW, STATUTORY AND OTHER RESERVED RIGHTS, INCLUDING THE COPYRIGHT THERETO. THIS DOCUMENT HAS BEEN PREPARED BY PROGRESSIVE ARCHITECTURE ENGINEERING, PC AS AN INSTRUMENT OF SERVICE, AND PROGRESSIVE SHALL RETAIN ALL COMMON LAW, STATUTORY AND OTHER RESERVED RIGHTS, INCLUDING THE COPYRIGHT THERETO.

Order Plans @ www.LDLine.com

progressive | ae
PROGRESSIVE ARCHITECTURE ENGINEERING, PC
330 South Tryon St.|Suite 500 | Charlotte, NC|28202 | 704.731.8080 |www.progressiveae.com

LEBLON FRANCHISING HOLDINGS, LLC.
POPEYE'S
LOUISIANA KITCHEN
921 CONCORD PARKWAY SOUTH.
CONCORD, NC, 28027

PROGRESSIVE ARCHITECTURE ENGINEERING PC 51348 NORTH CAROLINA CHARLOTTE, NC

J. RYAN DOHERTY REGISTERED ARCHITECT 11002 NORTH CAROLINA CHARLOTTE, N.C.
08/14/2020

FOR CONSTRUCTION

If this document is sealed and signed in a digital or electronic format and is received from someone other than the sealing professional identified in the document, you must contact the sealing professional in writing to validate authenticity of the document. The sealing professional disclaims the seal and signature and shall not be liable for any liability associated with it where the authenticity of any digital or electronic seal or signature has not been validated in this manner.

ISSUANCE
PERMIT SUBMITTAL 08/14/2020

REVISIONS
NO. DATE DESCRIPTION

FILE NUMBER	86560010
PROJECT MANAGER	DRG
PROFESSIONAL	JRD
DRAWN BY	DRG
CHECKED BY	DS

ENLARGED RESTROOM PLAN & ELEVATION

A15