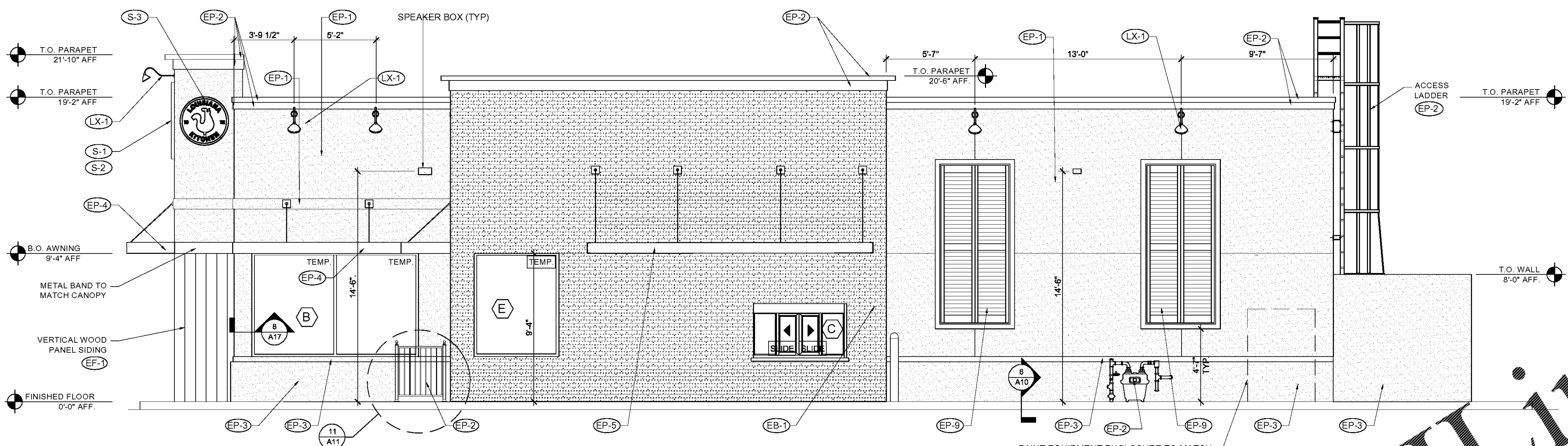

DRIVE THRU ELEVATION

1/A6 — 1/4"=1'-0"

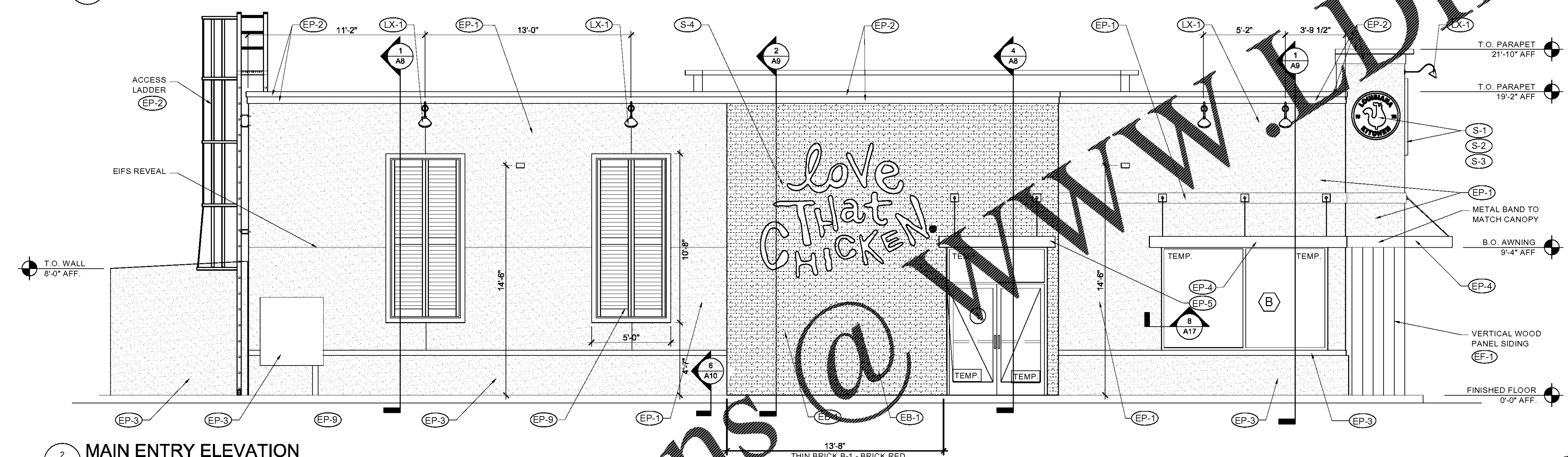

MAIN ENTRY ELEVATION

2/A6 — 1/4"=1'-0"

DRIVE THRU SPECIFICATIONS

DRIVE THRU WINDOW - QUIKSERV
MODEL # BP-7241E - STANDARD INSTALLATION
MODEL # BP-7241E-IP - HIGH WIND ZONE AS DETERMINED BY THE LOCAL BUILDING CODE

GENERAL NOTES:
ACTUAL DIMENSIONS: 72" (W) x 27" (H)
ROUGH OPENING 72 1/2" (W) x 41 1/2" (H)

1) EYE SET TO BE MOUNTED DIRECTLY BELOW THE SERVICE OPENING. BAR TO BE MOUNTED ON THE WALL.
2) ANCHOR SCREWS TO BE SUPPLIED BY THE CONTRACTOR.
3) JUNCTION BOX TO BE SUPPLIED BY CONTRACTOR.

INSTALLATION:
1) QUIKSERV WINDOWS MUST BE INSTALLED LEVEL AND SQUARE TO WORK PROPERLY.
2) ANCHOR ACCORDING TO THE LOCAL BUILDING CODE ANCHOR SCHEDULE.
3) 115V/15 AMP DEDICATED CIRCUIT FEATURE.
4) RECOMMENDED HEIGHT FROM FLOOR TO SERVCE OPENING TO BE 36". (CHECK FOR ANY LOCAL CODES OR CITY CODES)
5) SILICONE ALL EXTERIOR AND INTERIOR JOINTS.
6) ALL OTHER TYPES OF ANCHORING TO BE APPROVED BY CERTIFIED ENGINEER.

SHUTTER MANUFACTURER

SHUTTER CONTRACTOR
RANDALL FONTENOT
CAPITAL SIGNS & AWNINGS, LLC
902 NW Main Street
BUNKIE, LA 71322
(855)346-9898
318-346-9898 OFFICE
318-229-5747 CELL

EXTERIOR FINISH NOTES	
STO COLORS	
Match B.M. "Moonlight White"	
Match B.M. "Stonington Grey"	
DRYVIT COLORS	
Match B.M. "Moonlight White"	
Match B.M. "Stonington Grey"	
E.I.F.S. WALL TEXTURE FINISH	
Manuf.	Texture
STO	STO ESSENCE SWIRL
DRYVIT	QUARTZ PUTZ
FINISH NOTES	
THE FOLLOWING COMPONENTS CAN BE PURCHASED FROM THE APPROVED SIGN VENDORS:	
*	CLEARANCE BAR
*	MENU CANOPY
*	GUARD RAIL
*	AWNINGS
*	SHUTTERS
*	DUMPSTER GATES
*	EXTERIOR LADDER

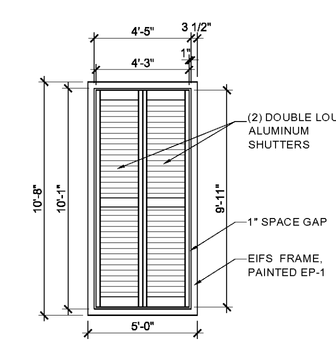

LARGE SHUTTER DIM

1/A5 — 1/4"=1'-0"

SPECIFICATIONS

SECTION TITLE
ALUMINUM - FRAMED ENTRANCES AND STOREFRONTS YKK AP PRODUCT SERIES YKK AP YES 45 FS/FI SERIES
PART 1 GENERAL
1. SECTION INCLUDES: ALUMINUM STOREFRONT, INCLUDING:
1.1. YKK AP SERIES YES 45 FI STOREFRONT SYSTEM (INSULATING GLAZING)
1. RELATED SECTIONS:
1.1. SINGLE SOURCE REQUIREMENT: ALL PRODUCTS LISTED BELOW SHALL BE BY THE SAME MANUFACTURER.

2. SYSTEM PERFORMANCE DESCRIPTION
2.1. PERFORMANCE REQUIREMENTS: PROVIDE ALUMINUM STOREFRONT SYSTEMS THAT COMPLY WITH PERFORMANCE REQUIREMENTS INDICATED, AS DEMONSTRATED BY TESTING MANUFACTURER'S ASSEMBLIES IN ACCORDANCE WITH TEST METHOD INDICATED.
2.2. AIR INFILTRATION: WHEN TESTED IN ACCORDANCE WITH ASTM E 283 AT DIFFERENTIAL STATIC PRESSURE OF 6.24 PSF (299 PA) COMPLETED STOREFRONT SYSTEMS SHALL HAVE MAXIMUM ALLOWABLE INFILTRATION OF:
2.2.1. 0.06 CFM/FT² (1.10 M ³ /H · M²) FOR YES 45 FI SYSTEMS.
2.3. WATER INFILTRATION: NO UNCONTROLLED WATER WHEN TESTED IN ACCORDANCE WITH ASTM E 331 AT TEST PRESSURE DIFFERENTIAL OF:
2.3.1. 10 PSF (479 PA) FOR YES 45 FI SYSTEMS. (OR WHEN REQUIRED, FIELD TESTED IN ACCORDANCE WITH AAMA 503). FASTENER HEADS MUST BE SEATED AND SEALED AGAINST SILL FLASHING ON ANY FASTENERS THAT PENETRATE THROUGH THE SILL FLASHING.
2.4. WIND LOADS: COMPLETED STOREFRONT SYSTEM SHALL WITHSTAND WIND PRESSURE LOADS NORMAL TO WALL PLANE INDICATED:
2.4.1. EXTERIOR WALLS:
2.4.1.1. POSITIVE PRESSURE: PER LOCAL CODE.
2.4.1.2. NEGATIVE PRESSURE: PER LOCAL CODE.
2.4.1.3. INTERIOR WALLS (PRESSURE ACTING IN EITHER DIRECTION): PER LOCAL CODE.
2.5. DEFLECTION: MAXIMUM ALLOWABLE DEFLECTION IN ANY MEMBER WHEN TESTED IN ACCORDANCE WITH ASTM E 330 WITH ALLOWABLE STRESS IN ACCORDANCE WITH AA SPECIFICATIONS FOR ALUMINUM STRUCTURES.
2.5. DEFLECTION: MAXIMUM ALLOWABLE DEFLECTION IN ANY MEMBER WHEN TESTED IN ACCORDANCE WITH ASTM E 330 WITH ALLOWABLE STRESS IN ACCORDANCE WITH AA SPECIFICATIONS FOR ALUMINUM STRUCTURES.
2.6. THERMAL MOVEMENT: PROVIDE FOR THERMAL MOVEMENT CAUSED BY 180 DEGREES F. (82.2 DEGREES C.) SURFACE TEMPERATURE, WITHOUT CAUSING BUCKLING, STRESSES ON GLASS, JOINT SEAL FAILURE, UNDUE STRESS ON STRUCTURAL ELEMENTS, DAMAGING LOADS ON FASTENERS, REDUCTION OF PERFORMANCE, OR DETRIMENTAL EFFECTS.
2.7. THERMAL PERFORMANCE: WHEN TESTED IN ACCORDANCE WITH AAMA 1503 AND NFRC 100.
2.7.1. CONDENSATION RESISTANCE FACTOR (CRF F): A MINIMUM OF 44 FOR YES 45 FI SYSTEMS.
2.7.2. THERMAL TRANSMITTANCE U VALUE: 0.51 BTU/HR/FT²/°F OR LESS FOR YES 45 FI SYSTEMS.
NOTE: THERMAL PERFORMANCE FOR THE GLAZED SYSTEM AS A WHOLE WILL BE AFFECTED BY THE CHARACTERISTICS OF THE GLASS SPECIFIED.
SUBMITTALS
2.1. GENERAL: PREPARE, REVIEW, APPROVE, AND SUBMIT SPECIFIED SUBMITTALS IN ACCORDANCE WITH "CONDITIONS OF THE CONTRACT" AND DIVISION 1 SUBMITTALS SECTIONS. PRODUCT DATA, SHOP DRAWINGS, SAMPLES, AND SIMILAR SUBMITTALS ARE DEFINED IN "CONDITIONS OF THE CONTRACT."
2.2. PRODUCT DATA: SUBMIT PRODUCT DATA FOR EACH TYPE STOREFRONT SERIES SPECIFIED AS REQUIRED BY THE ARCHITECT OF RECORD.
2.3. SUBSTITUTIONS: WHENEVER SUBSTITUTE PRODUCTS ARE TO BE CONSIDERED, SUPPORTING TECHNICAL DATA, SAMPLES, AND TEST REPORTS MUST BE SUBMITTED TEN (10) WORKING DAYS PRIOR TO BID DATE IN ORDER TO MAKE A VALID COMPARISON.
2.4. SHOP DRAWINGS: PROVIDE TO THE ARCHITECT OF RECORD IF REQUESTED. SHOP DRAWINGS SHOWING LAYOUT, PROFILES, AND PRODUCT COMPONENTS, INCLUDING ANCHORAGE, ACCESSORIES, FINISH COLORS AND TEXTURES.
2.5. QUALITY ASSURANCE / CONTROL SUBMITTALS:
2.5.1. TEST REPORTS: SUBMIT CERTIFIED TEST REPORTS SHOWING COMPLIANCE WITH SPECIFIED PERFORMANCE CHARACTERISTICS AND PHYSICAL PROPERTIES IF REQUIRED BY THE LOCAL PERMITTING AUTHORITY.
2.6. CLOSEOUT SUBMITTALS:
2.6.1. WARRANTY: SUBMIT WARRANTY DOCUMENTS SPECIFIED HEREIN.

QUALITY ASSURANCE
1. QUALIFICATIONS:
1.1. INSTALLER QUALIFICATIONS: INSTALLER EXPERIENCED (AS DETERMINED BY CONTRACTOR) TO PERFORM WORK OF THIS SECTION WHO HAS SPECIALIZED IN THE INSTALLATION OF WORK SIMILAR TO THAT REQUIRED FOR THIS PROJECT. IF REQUESTED BY OWNER, SUBMIT REFERENCE LIST OF COMPLETED PROJECTS.
2.2. PRE-INSTALLATION MEETINGS: CONDUCT PRE-INSTALLATION MEETING TO VERIFY PROJECT REQUIREMENTS, SUBSTRATE CONDITIONS, MANUFACTURER'S INSTALLATION INSTRUCTIONS, AND MANUFACTURER'S WARRANTY REQUIREMENTS.
3. PROJECT CONDITIONS / SITE CONDITIONS.
3.1. FIELD MEASUREMENTS: VERIFY ACTUAL MEASUREMENTS / OPENINGS BY FIELD MEASUREMENTS BEFORE FABRICATION; RETAIN RECORDED MEASUREMENTS ON SHOP DRAWINGS. COORDINATE FIELD MEASUREMENTS, FABRICATION SCHEDULE WITH CONSTRUCTION PROGRESS TO AVOID CONSTRUCTION DELAYS.
4. WARRANTY
4.1. PROJECT WARRANTY: REFER TO "CONDITIONS OF THE CONTRACT" FOR PROJECT WARRANTY PROVISIONS.
4.2. MANUFACTURER'S WARRANTY: SUBMIT, FOR OWNER'S ACCEPTANCE, MANUFACTURER'S STANDARD WARRANTY DOCUMENT EXECUTED BY AN AUTHORIZED COMPANY OFFICIAL.
4.3. WARRANTY PERIOD: MANUFACTURER'S ONE (1) YEAR STANDARD WARRANTY COMMENCING ON THE SUBSTANTIAL DATE OF COMPLETION FOR THE PROJECT PROVIDED THAT THE WARRANTY, IN NO EVENT, SHALL START LATER THAN SIX (6) MONTHS FROM THE DATE OF SHIPMENT BY YKK AP AMERICA INC. EDITOR NOTE: LONGER WARRANTY PERIODS ARE AVAILABLE AT ADDITIONAL COST.
5. PART 2 PRODUCTS
5.1. MANUFACTURERS (ACCEPTABLE MANUFACTURERS/PRODUCTS)
5.2. ACCEPTABLE MANUFACTURERS: YKK AP AMERICA INC.
5.3. STOREFRONT SYSTEM: YKK AP YES 45 FI STOREFRONT SYSTEM.
6. COLORS: AS SPECIFIED BY POPEYES LOUISIANA KITCHEN:

INSTALLATION
1. GENERAL: INSTALL MANUFACTURER'S SYSTEM IN ACCORDANCE WITH SHOP DRAWINGS, AND WITHIN SPECIFIED TOLERANCES.
1. PROTECT ALUMINUM MEMBERS IN CONTACT WITH MASONRY, STEEL, CONCRETE, OR DISSIMILAR MATERIALS USING NYLON PADS OR BITUMINOUS COATING.
2. SHIM AND BRACE ALUMINUM SYSTEM BEFORE ANCHORING TO STRUCTURE.
3. SHIM AND BRACE ALUMINUM SYSTEM BEFORE ANCHORING TO STRUCTURE.
4. PROVIDE SILL FLASHING AT EXTERIOR STOREFRONT SYSTEMS. EXTEND EXTRUDED FLASHING CONTINUOUS WITH SPLICE JOINTS; SET IN CONTINUOUS BEADS OF SEALANT.
5. VERIFY STOREFRONT SYSTEM ALLOWS WATER ENTERING SYSTEM TO BE COLLECTED IN GUTTERS AND WEPT TO EXTERIOR. VERIFY METAL JOINTS ARE SEALED IN ACCORDANCE WITH MANUFACTURERS INSTALLATION INSTRUCTIONS.

SECTION 8D: GLAZING

GENERAL PROVISIONS

1. SCOPE: FURNISH AND INSTALL GLASS IN STOREFRONT AND DRIVE-THRU SERVICE WINDOW.

MATERIALS
1. TYPE: SOLAR CONTROL LOW-E CLEAR INSULATING GLASS "SOLARBAN 70XL (2) CLEAR + CLEAR BY VITRO ARCHITECTURAL GLASS.
1.1. OUTDOOR LITE: CLEAR GLASS, SPUTTER COATED ON SECOND SURFACE (2)
1.2. INDOOR LITE: CLEAR (TRANSPARENT) FLOAT GLASS.
1.3. LOW-E COATING: "SOLARBAN" 60 SOLAR CONTROL (SPUTTERED) BY VITRO ARCHITECTURAL GLASS
LOCATION: SECOND SURFACE (2)

2. PERFORMANCE VALUES:
2.1. VISIBLE LIGHT TRANSMITTANCE: 64%
2.2. U-VALUE WINTER: 0.24
2.3. U-VALUE SUMMER : 0.21
2.4. SHGC: 0.27
2.5. SHADING COEFFICIENT: 0.31
2.6. OUTDOOR VISIBLE LIGHT REFLECTANCE: 12%

APPROVED MANUFACTURERS:
VITRO CERTIFIED FABRICATOR REQUIRED
CERTIFICATION: BOTH LITES TO BE CRADLE TO CRADLE CERTIFIED™, MINIMUM BRONZE LEVEL, BY CRADLE TO CRADLE PRODUCT INNOVATION INSTITUTE (WWW.C2CCERTIFIED.ORG).

OUTDOOR APPEARANCE: CLEAR
INSULATING UNIT CONSTRUCTION: 1/4" (6MM) GLASS + 1/2" (13MM) AIR SPACE + 1/4" (6MM) GLASS

EXTERIOR FINISH AND MATERIAL SCHEDULE

CODE	MATERIAL	LOCATION	MANUFACTURER	PRODUCT	DESCRIPTION	DIMENSIONS	ADDITIONAL INFORMATION
EP-1	EXTERIOR PAINT	MAIN WALL SURFACE ABOVE WAINSCOT ACCENT TRIM	BENJAMIN MOORE	PRIMER: PAINT:	COLOR: "White" OC-125 Moonlight White		Contact: Rodger Lippman, Architectural Account Executive Phone: (800) 344-0400 Ext 5240 email: rodger.lippman@benjaminmoore.com
EP-2	EXTERIOR PAINT	PARAPET TRIM		PRIMER: PAINT:	COLOR: "Black" 2120-20 Black Iron		
EP-3	EXTERIOR PAINT	WAINSCOT ACCENT TRIM AND BELOW		PRIMER: PAINT:	COLOR: "Gray" HC-170 Stonington Grey		
EP-4	EXTERIOR PAINT	BOLLARDS, PYLON POLE AND DIRECTIONAL SIGN POLES		PRIMER: PAINT:	COLOR: "Red" 2086 Exotic Red		
EP-5	EXTERIOR PAINT	DRIVE THRU WINDOW CANOPY		PRIMER: Pro Industrial Pro-Cryl Primer B666-310 PAINT: Pro Industrial High Performance Acrylic B66-660	FACTORY FINISH BLACK		
EP-6	EXTERIOR PAINT	DUMPSTER WALLS	BENJAMIN MOORE	PRIMER: PAINT:	COLOR: "Gray" HC-170 Stonington Grey		
EP-7	EXTERIOR PAINT	DUMPSTER GATES		PRIMER: Pro Industrial Pro-Cryl Primer B666-310 PAINT: Pro Industrial High Performance Acrylic B66-660	FACTORY FINISH BLACK		
EP-8	EXTERIOR PAINT	ALL EXTERIOR WALLS		PAINT: Aliphatic Acrylic Urethane, Clear Gloss	ANTI-GRAFFITI PAINT M74-00 / M75 (2) COATS ON FULL FACADE SURFACE		
EP-9	EXTERIOR PAINT	ACCENT SHUTTERS		PRIMER: PAINT:	COLOR: "TEAL" CC-699 Oceanic Teal		
EF-1	WOOD SIDING PANEL	EXTERIOR WALLS	NICHIHA	VINTAGE WOOD	CEDAR		
EB-1	BRICK	EXTERIOR TOWERS	DESIGN AND DIRECT SOURCE	ARCHITECTURAL URBAN SERIES	FLAGSTAFF		

ARCHITECTURE ENGINEERING, PC SHALL RETAIN ALL COMMON LAW, STATUTORY AND OTHER RESERVED RIGHTS, INCLUDING THE COPYRIGHT THERETO. THIS DOCUMENT HAS BEEN PREPARED BY PROGRESSIVE ARCHITECTURE ENGINEERING, PC AS AN INSTRUMENT OF SERVICE, AND PROGRESSIVE SHALL RETAIN ALL COMMON LAW, STATUTORY AND OTHER RESERVED RIGHTS, INCLUDING THE COPYRIGHT THERETO.

progressive | ae
PROGRESSIVE ARCHITECTURE ENGINEERING, PC
330 South Tryon St.|Suite 500 | Charlotte, NC|28202 | 704.731.8080 | www.progressiveae.com

POPEYES

LEBLON FRANCHISING HOLDINGS, LLC.
POPEYE'S
LOUISIANA KITCHEN
921 CONCORD PARKWAY SOUTH.
CONCORD, NC, 28027

08/14/2020

FOR CONSTRUCTION

If this document is sealed and signed in a digital or electronic format and is received from someone other than the sealing professional identified in the document, you must contact the sealing professional in writing to validate authenticity of the document. The sealing professional disclaims the seal and signature and shall not be liable for any liability associated with it where the authenticity of any digital or electronic seal or signature has not been validated in this manner.

ISSUANCE
PERMIT SUBMITTAL 08/14/2020

REVISIONS
NO. DATE DESCRIPTION

FILE NUMBER	86560010
PROJECT MANAGER	DRG
PROFESSIONAL	JRD
DRAWN BY	DRG
CHECKED BY	DS

EXTERIOR ELEVATIONS

A6

Order Plans @ WWW.LDILine.com