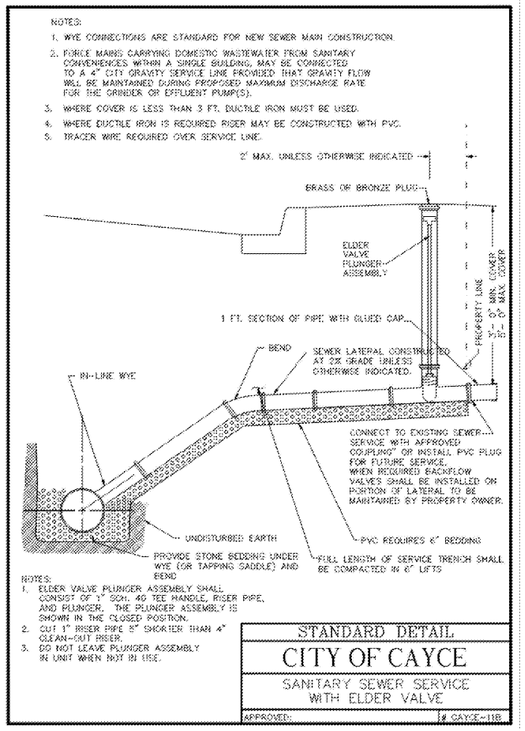

WS10	SANITARY SEWER SERVICE WITH ELDER VALVE				

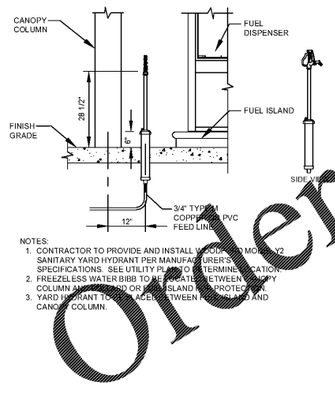

WS11	FREEZELESS HYDRANT WITH HOSE BIB				

Order Plans @ WWW.LDILine.com

Sheet No. C-19

SOUTH CAROLINA PROFESSIONAL ENGINEER No. 36239 CAREY EVERETT GUYTON

SOUTH CAROLINA KECK & WOOD, INC. No.C00617 CERTIFICATE OF AUTHORIZATION

REV-5	08/05/20	MM	GS	CG	CG
	DATE	PRN	PM	DES	DRW

Water & Sewer Details
Murphy Express
4404 Augusta Road
Keck & Wood Project No. 180167

Keck+Wood
COLLABORATION BY DESIGN
4055 Faber Place Drive, Suite 210
North Charleston, SC 29405
(843) 279-9000 keckwood.com

MURPHY OIL USA, INC.
MURPHY USA
200 PEACH STREET
EL DORADO, AR 71730

Z:\Murphy Oil\180167.00 - Lexington, SC (Hwy 1 & Oak Dr)\00 Production\01 CAD\180167.dwg