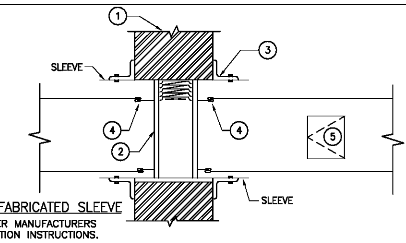

TYPICAL FIELD FABRICATED SLEEVE

INSTALL DAMPER PER MANUFACTURERS
UL LISTED INSTALLATION INSTRUCTIONS.

ITEM	DESCRIPTION
1 RATED PARTITION	REFER TO ARCHITECTURAL DRAWINGS FOR WALL CONSTRUCTION AND FRAMING DETAILS
2 FIRE DAMPER OR COMBINATION FIRE/SMOKE DAMPER	SEE FIRE DAMPER SCHEDULE FOR TYPE OF DAMPER
3 MOUNTING FRAME	REFER TO MANUFACTURER'S INSTALLATION DETAILS FOR SIZE, ATTACHMENT, CLEARANCES AND SEALANTS REQUIRED TO ACHIEVE FIRE RESISTANCE RATING.
4 DUCT CONNECTION	S-LOCK AND ALL 4 SIDES OF DUCTWORK OR MANUFACTURERED PRODUCT DESIGNED TO ALLOW DUCT TO BREAK AWAY FROM DAMPER SLEEVE
5 ACCESS PANEL	SIZE ACCESS PANEL PER SMACNA STANDARDS. SEE SPECIFICATIONS FOR ACCEPTABLE ACCESS PANELS EDGE OF ACCESS PANEL SHALL BE LESS THAN 12 INCHES FROM THE FIRE DAMPER AND ON THE MECHANISM SIDE OF THE DAMPER. AN EIGHTEEN INCH LONG REMOVABLE SECTION OF DUCT MAY BE SUBSTITUTED FOR AN ACCESS PANEL WHERE DUCT WIDTH AND HEIGHT ARE BOTH LESS THAN 16 INCHES.

FIRE DAMPER SCHEDULE

DUCT VELOCITY, FPM	ACCEPTABLE DAMPER TYPES
LESS THAN 700	CURTAIN WITH STACK IN AIR STREAM (STATIC RATED) CURTAIN WITH STACK OUT OF AIR STREAM (STATIC RATED) CURTAIN WITH STACK OUT OF AIR STREAM (DYNAMIC RATED) PARALLEL BLADE (DYNAMIC RATED) FIRE DAMPER OR COMBINATION FIRE/SMOKE DAMPER
700 TO 2000	CURTAIN WITH STACK OUT OF AIR STREAM (STATIC RATED) CURTAIN WITH STACK OUT OF AIR STREAM (DYNAMIC RATED) PARALLEL BLADE (DYNAMIC RATED) FIRE DAMPER OR COMBINATION FIRE/SMOKE DAMPER
GREATER THAN 2000	CURTAIN WITH STACK OUT OF AIR STREAM (DYNAMIC RATED) PARALLEL BLADE (DYNAMIC RATED) FIRE DAMPER OR COMBINATION FIRE/SMOKE DAMPER

C3 / M501 — FIRE DAMPER DETAIL

NTS

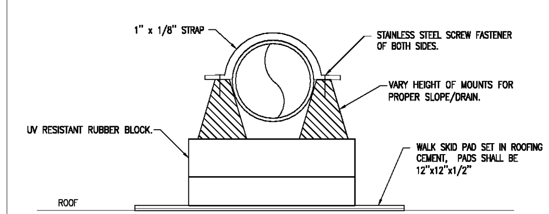

D2 / M501 — CONDENSATE ROOF PIPING SUPPORT DETAIL

NTS

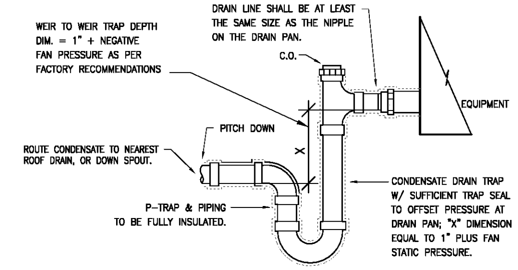

D1 / M501 — CONDENSATE DRAIN TRAP DETAIL

NTS

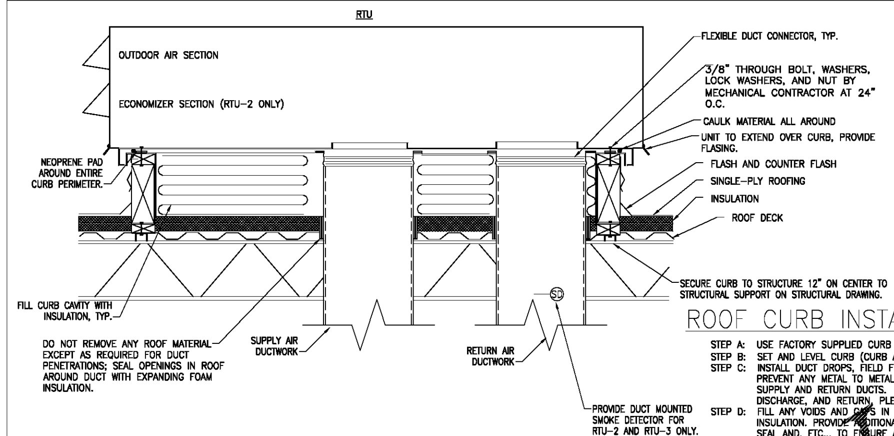

NOTE:
PROVIDE AND INSTALL PREMANUFACTURED ROOF CURBS MOUNTED TO ROOF STRUCTURE TO MEET LOCAL NOA RATING WITH WIND LOCAL SPEED. MOUNT RTU TO CURB WITH ATTACHMENTS MEETING NOA RATING. PROVIDE NEOPRENE VIBRO-ISOLATION PADDING AROUND ENTIRE UNIT. CURB ADAPTORS MAYBE USED. REFER TO MANUFACTURE FOR INSTALLATION DETAILS, MEET WIND SPEED RATINGS, AND INSTALL WITH ATTACHMENTS MEETING NOA RATING.

ROOF CURB INSTALLATION INSTRUCTIONS:

- STEP A: USE FACTORY SUPPLIED CURB (OR CURB ADAPTOR).
- STEP B: SET AND LEVEL CURB (CURB ADAPTOR), BOLT DOWN TO STRUCTURE.
- STEP C: INSTALL DUCT DROPS, FIELD FURNISH AND INSTALL INSULATED CURB FLANGE TO PREVENT ANY METAL TO METAL CONTACT. PROVIDE FLEXIBLE CONNECTIONS ON ALL SUPPLY AND RETURN DUCTS. INSTALL PREMANUFACTURED CONCENTRIC DUCT DISCHARGE, AND RETURN, PLENUM, AS REQUIRED.
- STEP D: FILL ANY VOIDS AND GAPS IN ROOF OPENINGS AROUND DUCT WITH EXPANDING FOAM INSULATION. PROVIDE ADDITIONAL FLASHING, INSULATION, ROOFING MEMBRANE, ROOFING SEAL AND, ETC... TO ENSURE A WATER TIGHT SEAL.
- STEP E: APPLY NEOPRENE PAD ALL AROUND ENTIRE CURB PERIMETER.
- STEP F: SET ROOFTOP UNIT AND SEAL PERIMETER WITH WEATHERPROOF CAULKING PER DETAIL. MAKE ALL FINAL CONNECTIONS TO UNIT.

C2 / M501 — RTU DETAIL

NTS

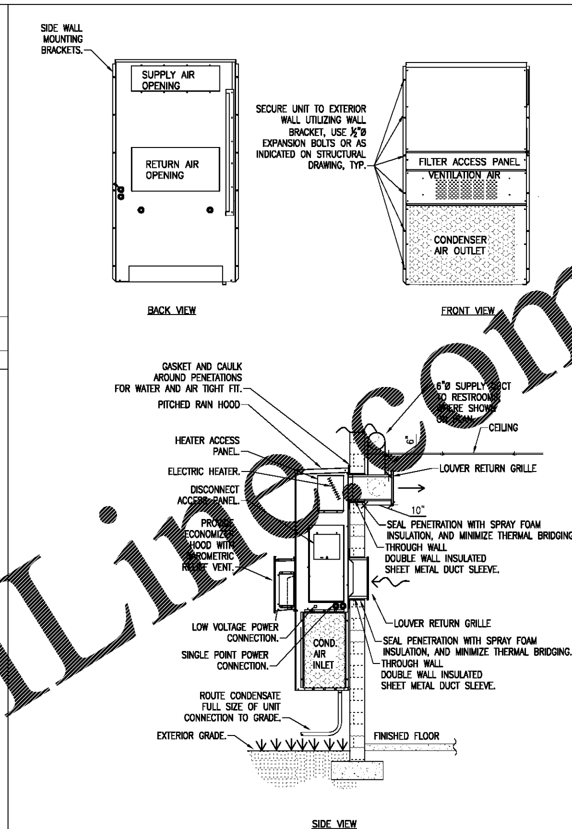

C1 / M501 — WALL MOUNTED AC UNIT DETAIL

NTS

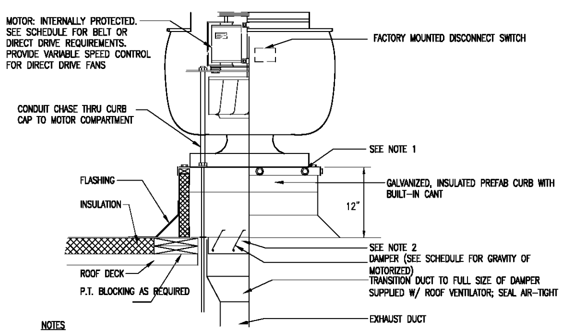

NOTES

1. SECURE CURB CAP TO WOOD NAILING STRIP WITH 1/4" S.S. LAG BOLTS NOT OVER 12" ON CENTER.
2. SECURE ROOF CURB, DUCTWORK AND DAMPER TO ROOF WITH EXPANSION BOLTS (CONCRETE ROOF) OR RUST RESISTANT BOLTS (METAL DECK AND BAR JOIST ROOF).
3. SIZE OF DUCT THROUGH ROOF SHALL NOT BE LARGER THAN CURB SUPPLIED WITH ROOF VENTILATOR.
4. RUN ELECTRIC LINES THROUGH CLEARANCE HOLE PROVIDED THEN THROUGH CONDUIT GUIDE.

B4 / M501 — EXHAUST FAN DETAIL

NTS

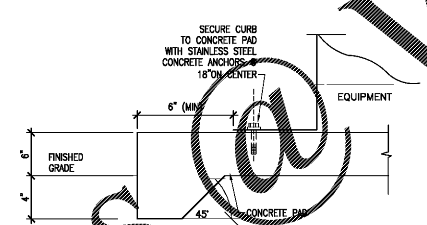

B3 / M501 — EQUIPMENT PAD DETAIL

NTS

NOTES:
1. MOUNT UNIT PER MANUFACTURER SPECIFICATIONS AND MINIMUM INSTALLATION CLEARANCES.
2. INSTALL ACCORDING TO ALL APPLICABLE NATIONAL AND LOCAL ELECTRICAL, MECHANICAL AND BUILDING CODES.
3. CONDENSATE LINE AND POWER LINE SHOWN OFFSET FOR CLARITY.

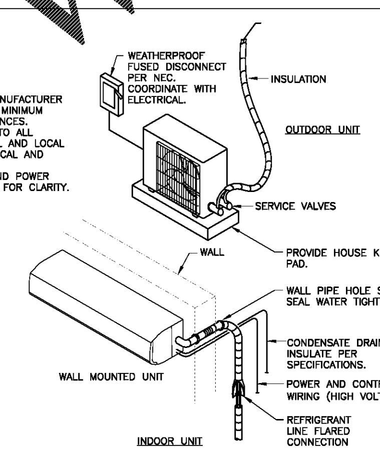

B2 / M501 — DUCTLESS SPLIT SYSTEM DETAIL

NTS

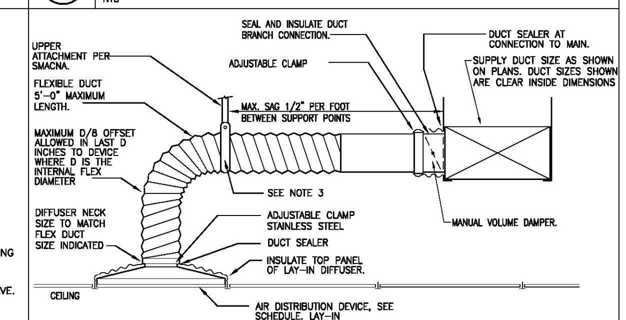

NOTES:

1. FLEXIBLE DUCTS SHALL BE ONE-PIECE AND SHALL NOT BE SPLICED TOGETHER.
2. EXTEND FLEXIBLE DUCT INSULATION TO DUCT/DIFFUSER PANEL INSULATION AND SEAL WITH MASTIC.
3. MINIMUM 1" WIDE 22 GA. GALVANIZED STRAP HANGER WITH HEMMED EDGES PER SMACNA DUCT MANUAL, FIGURE 3-10.
4. FLEXIBLE AIR DUCT SHALL BE FULLY EXTENDED AND NOT COMPRESSED. ELBOW RADIUS SHALL NOT BE LESS THAN R/D = 1.0.
5. SEAL ALL DUCT CONNECTIONS, COLLARS, AND FLANGES. INSULATE ALL DUCT CONNECTIONS, COLLARS, AND FLANGES. SEAL INSULATION SEAMS WITH MASTIC.

B1 / M501 — FLEXIBLE DUCT CONNECTION DETAIL

NTS

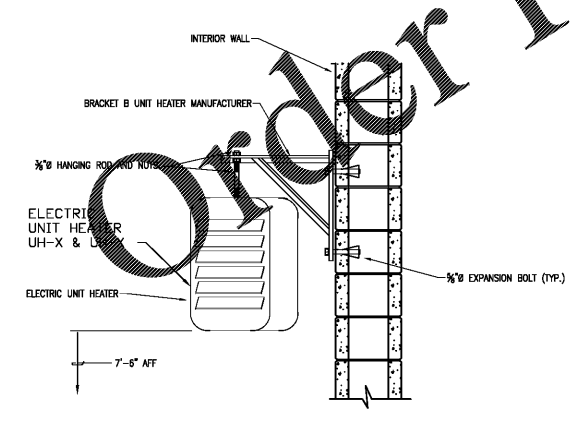

A4 / M501 — ELECTRIC UNIT HEATER DETAIL

NTS

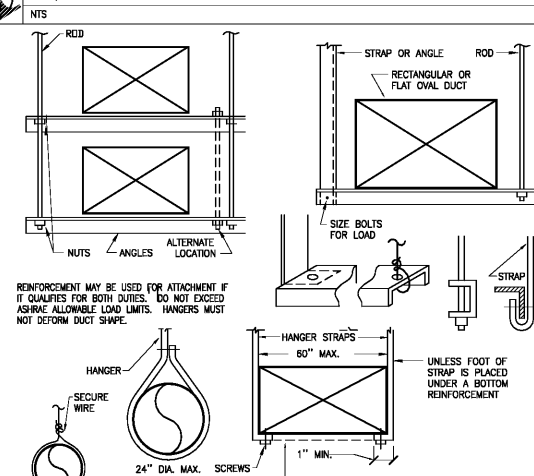

A3 / M501 — DUCT SUPPORT DEATIL

NTS

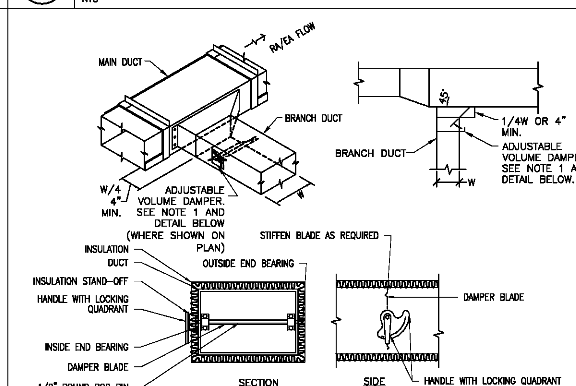

NOTES:
1. PROVIDE ADJUSTABLE VOLUME DAMPER WITH POSITIONING LEVER, EXTENSION SECTION (INSULATED DUCT ONLY) AND LOCKING WING NUT. VOLUME DAMPER SHALL BE SINGLE BLADE OR MULTI-BLADE DEPENDING ON DUCT SIZE.
2. DELETE INSULATION STAND-OFF ON DUCTWORK WITHOUT EXTERIOR INSULATION.
3. DETAIL SHOWS SINGLE BLADE DAMPER. DAMPER INSTALLATION SHALL BE SIMILAR FOR MULTI-BLADE DAMPERS & ROUND DAMPERS.

A2 / M501 — BRANCH DUCT TAKEOFF DETAIL

NTS

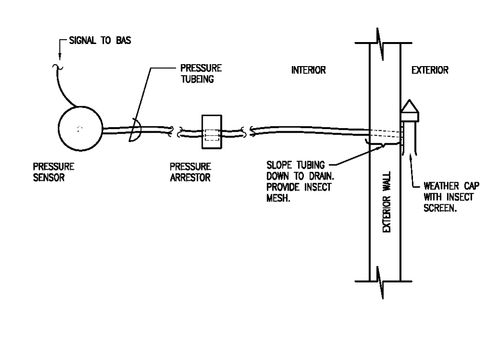

A1 / M501 — SPACE PRESSURE SENSOR DETAIL

NTS

Order Plans @ WWW.DIILine.com

BROWNSTONE

1310 LADY STREET . SUITE 204 . COLUMBIA, SOUTH CAROLINA . 29201

All rights reserved. This drawing and the design shown thereon are copyright as prescribed by the laws of the United States and are the propert of Brownstone Design. Anyone duplicating, reproducing or causing to be reproduced the whole or part of these drawings or the design thereon without written permission of the Architect and/or Brownstone Design will be subject to legal action.

Seal

SOUTH CAROLINA
BLV ELECTRICAL ENGINEERS INC
No. 6069
CERTIFICATE OF AUTHORIZATION

SOUTH CAROLINA LICENSED PROFESSIONAL ENGINEER
No. 38087

Client

ALLENDALE-FAIRFAX COUNTY SCHOOL DISTRICT

Project

ALLENDALE PRIMARY SCHOOL

Issued For

90% PRICING SET
MARCH 16, 2020

No.	Item	Date

Key Plan

PROFESSIONAL
BERRY L. VENEY JR.
ENGINEERS
SOUTH CAROLINA C.O.A. # 6069

Sheet Title

MECHANICAL DETAILS

M-501

Drawn By AKG

Checked By Checker