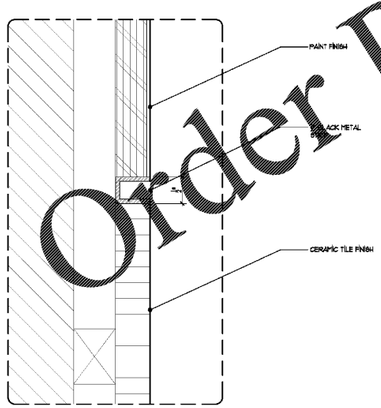

4 DETAIL
Scale: 12"=1'-0

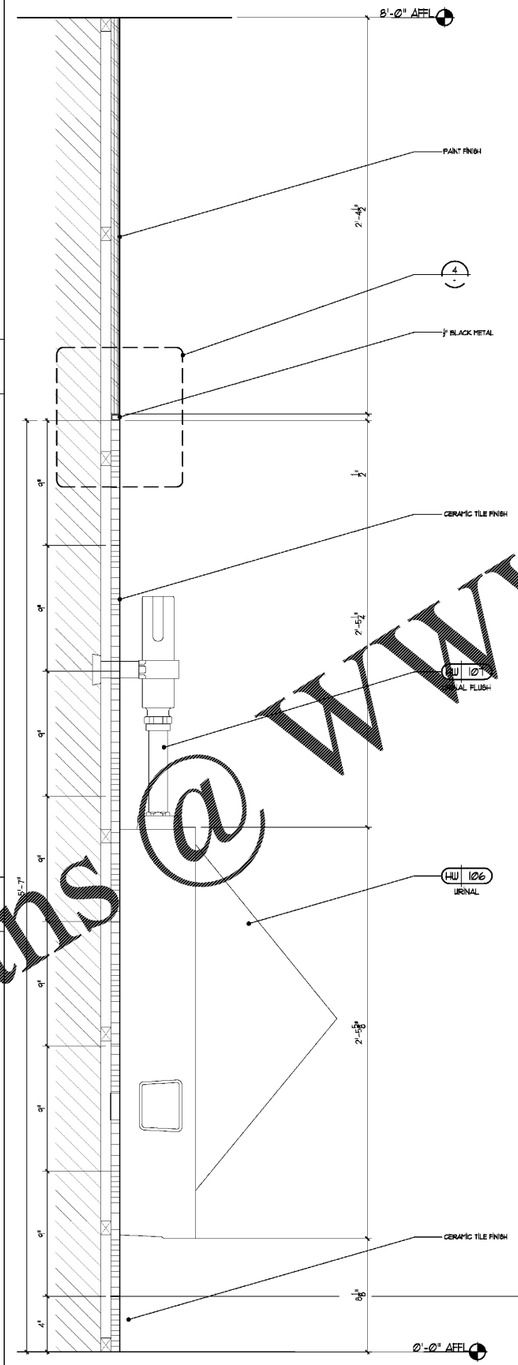

3 SECTION
Scale: 3"=1'-0

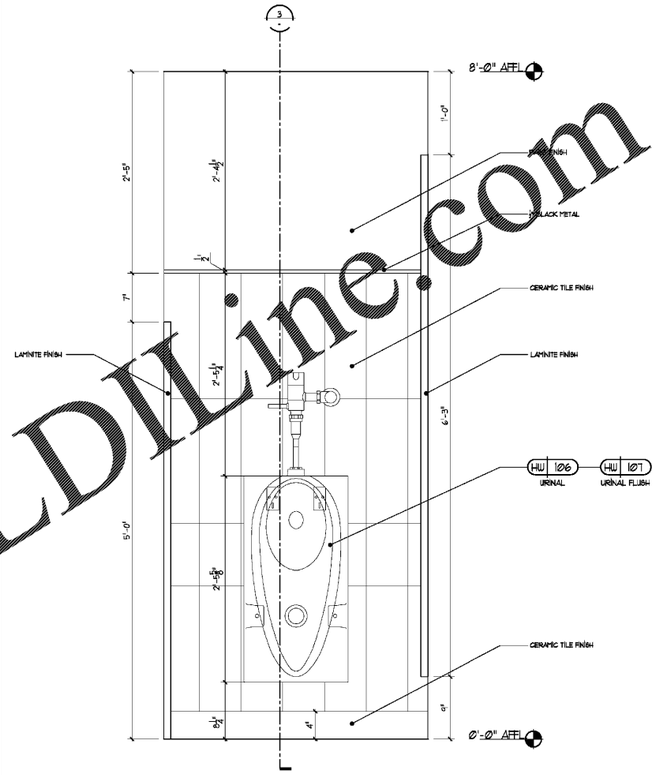

2 ELEVATION
Scale: 1 1/2"=1'-0

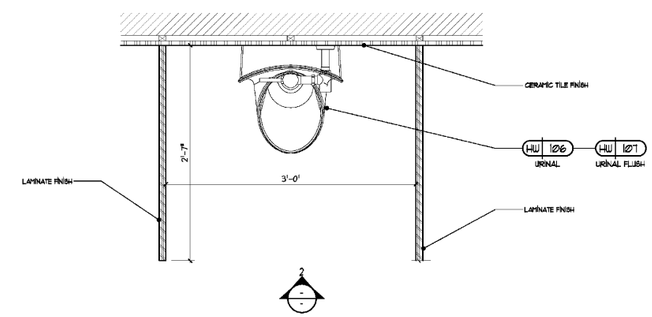

1 PLAN
Scale: 1 1/2"=1'-0

Order Plans @ WWW.LDILine.com

HKS

ARCHITECT
HKS ARCHITECTS, INC.
#AA F000119
2020 SALZEDO ST. 4TH FLOOR
CORAL GABLES, FL 33134

STRUCTURAL CONSULTANT
THORNTON TOMASETTI
101 NE THIRD AVE., SUITE 1170
FORT LAUDERDALE, FL 33301-1199

MEP CONSULTANT
THOMPSON EHLE
50 TECHNOLOGY PKWY S. PEACHTREE CORNERS, GA 30092

KITCHEN CONSULTANT
INNOVATIVE FOOD SERVICE
11101 NORTH 46TH STREET, TAMPA, FL 33617

WATERPROOFING CONSULTANT
CDC USA
8070 Park Ln., Suite 400 Dallas, TX 75231

CODE & LIFE SAFETY CONSULTANT
HOWE ENGINEERS
101 LONGWATER CIR, NORWELL, MA 02061

MARRIOTT SAWGRASS CABANA CLUB

619 PONTE VEDRA BLVD
PONTE VEDRA BEACH, FL 32082

OWNER
WATERMARK CAPITAL PARTNERS, LLC
150 NORTH RIVERSIDE PLAZA SUITE 4200
CHICAGO, IL 60606

OWNER'S CONSULTANT
THE JOHN HARDY GROUP INC.
6085 BARFIELD RD. SUITE 200
ATLANTA, GA 30328

CIVIL ENGINEER AND LANDSCAPE CONSULTANT
KIMLEY-HORN
12740 GRAN BAY PARKWAY WEST
SUITE 2350
JACKSONVILLE, FL 32258

INTERIOR DESIGN CONSULTANT
HBA DESIGN
3216 NEBRASKA AVENUE, SANTA MONICA, CALIFORNIA 90404 U. S. A.

This drawing is for information only to be used by the contractors as a general arrangement of interior conditions. It has been made from available information, however measurements are to be verified on project site. This drawing must be verified and approved prior to final detailing and fabrication.
This drawing is the property of HIRSCH SEDNER AND ASSOCIATES and is not to be reproduced or copied in whole or in part. It is only to be used for the project and site specifically identified herein and is not to be used on any other project. It is to be returned upon request.

KEY PLAN

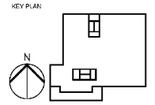

REVISION
NO. DESCRIPTION DATE

HKS PROJECT NUMBER
22808.001
DATE
05/22/2020
ISSUE
PERMIT SET

SHEET TITLE
PUBLIC AREA - LEVEL 1&2
URINAL DETAILS
-

SHEET NO.
ID-900

© 2018 HKS ARCHITECTS, INC.

PLOT DATE:
7/7/2020 12:36:51 PM
TEMPLATE VERSION: Template Version