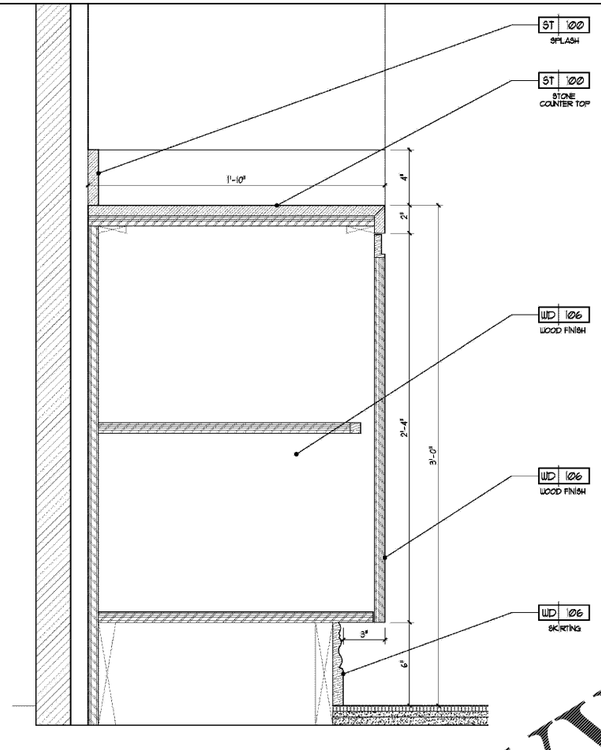


4 S/S COUNTER DETAIL
Scale: 3" = 1'-0

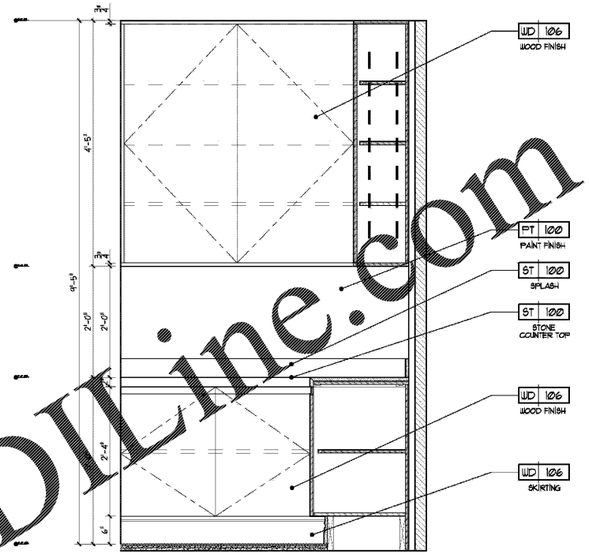


2 S/S COUNTER ELEVATION
Scale: 1" = 1'-0

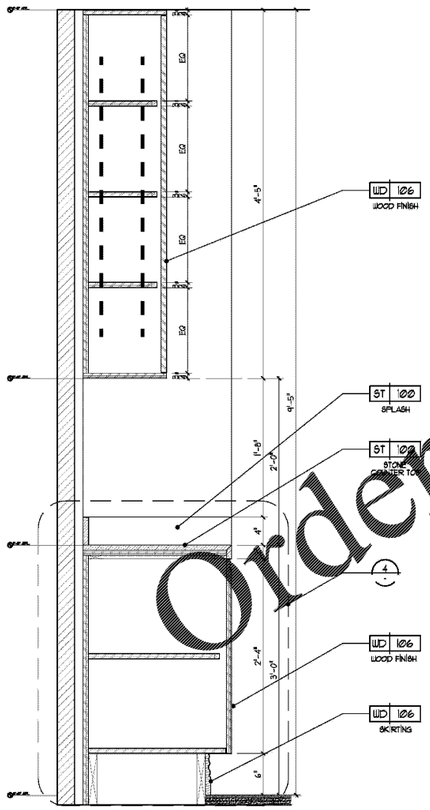


5 S/S COUNTER SECTION
Scale: 1 1/2" = 1'-0

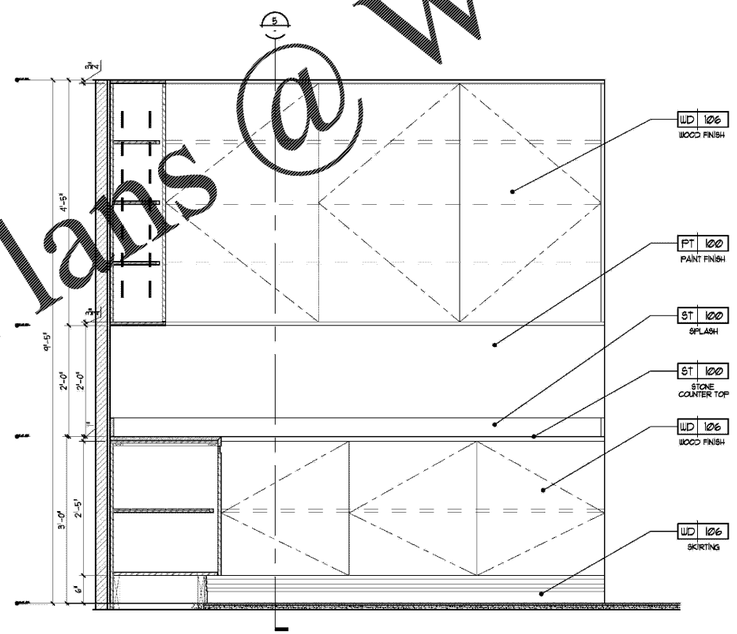


3 S/S COUNTER ELEVATION
Scale: 1" = 1'-0

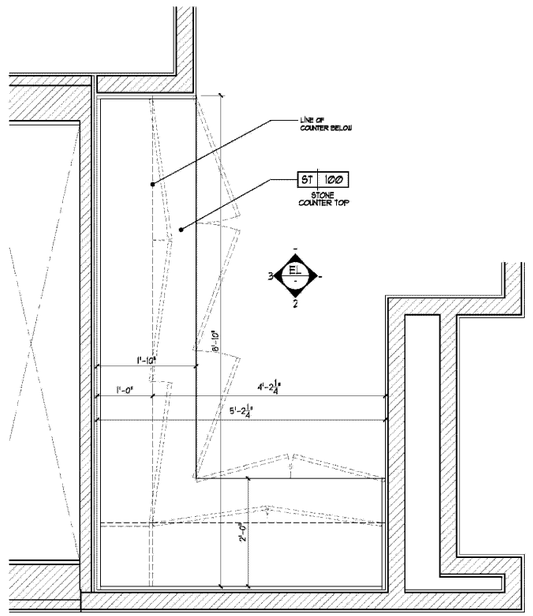


1 PLAN @ SS COUNTER
Scale: 1" = 1'-0

Order Plans @ WWW.LDILine.com

HKS

**ARCHITECT**
HKS ARCHITECTS, INC.
#AA F000119
2020 SALZEDO ST, 4TH FLOOR
CORAL GABLES, FL 33134

**STRUCTURAL CONSULTANT**
THORNTON TOMASETTI
101 NE THIRD AVE., SUITE 1170
FORT LAUDERDALE, FL 33301-1199

**MEP CONSULTANT**
THOMPSON EHLE
50 TECHNOLOGY PKWY S. PEACHTREE CORNERS, GA 30092

**KITCHEN CONSULTANT**
INNOVATIVE FOOD SERVICE
11101 NORTH 46TH STREET, TAMPA, FL 33617

**WATERPROOFING CONSULTANT**
CDC USA
8070 Park Ln., Suite 400 Dallas, TX 75231

**CODE & LIFE SAFETY CONSULTANT**
HOWE ENGINEERS
101 LONGWATER CIR, NORWELL, MA 02061

# MARRIOTT SAWGRASS CABANA CLUB

619 PONTE VEDRA BLVD
PONTE VEDRA BEACH, FL 32082

**OWNER**
WATERMARK CAPITAL PARTNERS, LLC
150 NORTH RIVERSIDE PLAZA SUITE 4200
CHICAGO, IL 60606

**OWNER'S CONSULTANT**
THE JOHN HARDY GROUP INC.
6085 BARFIELD RD. SUITE 200
ATLANTA, GA 30328

**CIVIL ENGINEER AND LANDSCAPE CONSULTANT**
KIMLEY-HORN
12740 GRAN BAY PARKWAY WEST
SUITE 2350
JACKSONVILLE, FL 32258

**INTERIOR DESIGN CONSULTANT**
HSA DESIGN
3216 NEBRASKA AVENUE, SANTA MONICA, CALIFORNIA 90404 U. S. A.

This drawing is for information only to be used by the contractors as a general arrangement of interior conditions. It has been made from available information, however measurements are to be verified on project site. This drawing must be verified and approved prior to final detailing and fabrication.
This drawing is the property of HIRSCH SEDNER AND ASSOCIATES and is not to be reproduced or copied in whole or in part. It is only to be used for the project and site specifically identified herein and is not to be used on any other project. It is to be returned upon request.

KEY PLAN

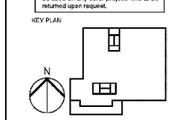


REVISION
NO. DESCRIPTION DATE

HKS PROJECT NUMBER
**22808.001**

DATE
**05/22/2020**

ISSUE
**PERMIT SET**

SHEET TITLE
**PUBLIC AREA - L1 SERVICE STATION**
-

SHEET NO.
**ID-702**

© 2016 HKS ARCHITECTS, INC.

PLOT DATE: 7/7/2020 12:06:51 PM TEMPLATE VERSION: Template Version