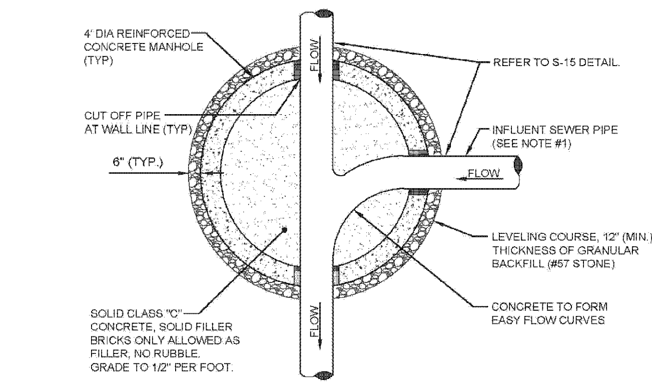

NOTES:

1. THE ANGLE BETWEEN ALL INFLUENT FLOW CHANNELS AND EFFLUENT PIPE SHALL BE BETWEEN 90° - 180° UNLESS OTHERWISE APPROVED BY JEA.

PLAN VIEW (S-3)

(FOR SECTION VIEW SEE S-2)

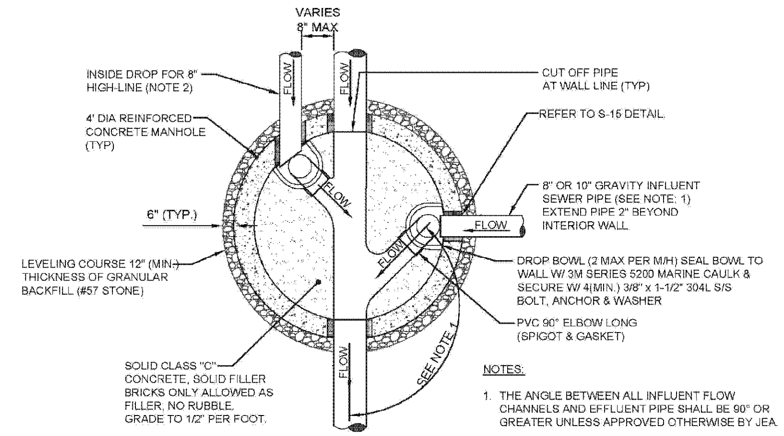

NOTES:

1. THE ANGLE BETWEEN ALL INFLUENT FLOW CHANNELS AND EFFLUENT PIPE SHALL BE 90° OR GREATER UNLESS APPROVED OTHERWISE BY JEA.
2. THE 8" HIGH-LINE, WHERE UTILIZED, SHALL ENTER THE MANHOLE ON-CENTER OR OFF-CENTER AS SHOWN ABOVE.

PLAN VIEW (S-5)

(FOR SECTION VIEW SEE S-4)

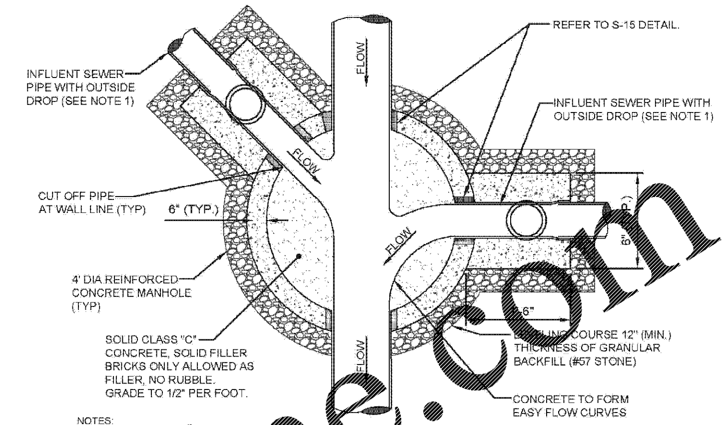

NOTES:

1. THE ANGLE BETWEEN ALL INFLUENT FLOW CHANNELS AND EFFLUENT PIPE SHALL BE 90° OR GREATER UNLESS APPROVED OTHERWISE BY JEA.
2. THE INTERIOR AND EXTERIOR OF THE MANHOLE AND THE INTERIOR OF THE ADJUSTMENT RINGS SHALL BE GIVEN 2 COATS OF BITUMINOUS WATERPROOFING MATERIAL.
3. IF SPECIALITY LINER IS TO BE INSTALLED ON INSIDE OF MANHOLE, THE BITUMINOUS WATERPROOFING MATERIAL SHALL BE OMITTED ON THE INSIDE.
4. TYPE "D" MANHOLES SHALL BE USED FOR 12" OR LARGER INFLUENT PIPES W/ 2' OR GREATER INFLUENT DROP.

PLAN VIEW (S-8)

(FOR SECTION VIEW SEE S-7)

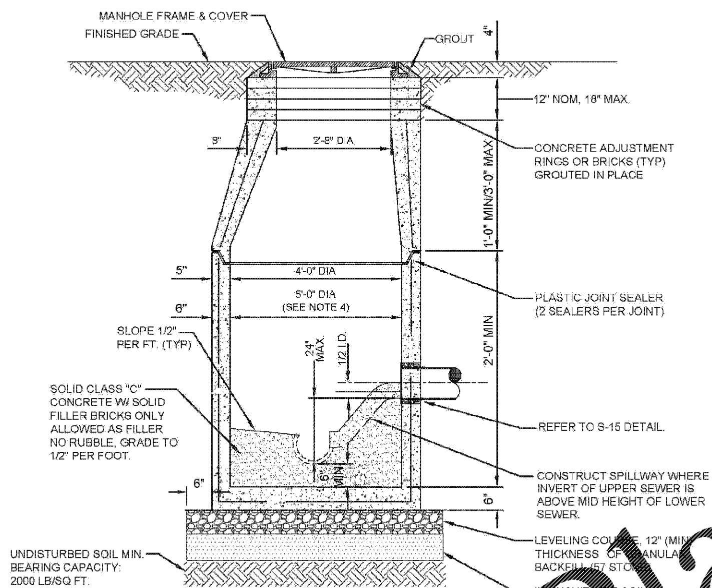

SECTION VIEW (S-2)

(FOR PLAN VIEW SEE S-3)

NOTES:

1. PRECAST MANHOLE SECTIONS TO BE MANUFACTURED IN ACCORDANCE WITH THE LATEST EDITIONS OF A.S.T.M. C-478 WITH 4000 LB. CONC., TYPE II CEMENT. ALL LIFTING HOLES AND OUTSIDE INSERTS SHALL BE FILLED WITH NON-SHRINK GROUT AND COATED WITH BITUMINOUS WATERPROOFING MATERIAL.
2. THE INTERIOR AND EXTERIOR OF MANHOLE AND ADJUSTING RINGS SHALL BE GIVEN TWO COATS OF BITUMINOUS WATERPROOFING MATERIAL.
3. IF SPECIALTY LINER IS TO BE INSTALLED ON INSIDE SURFACE OF MANHOLE, THE BITUMINOUS WATERPROOFING MATERIAL SHALL BE OMITTED ON THE INSIDE.
4. JUNCTION MANHOLES, CLOSEST TO WETWELL SHALL BE 5' DIA WITH SPECIALTY LINER.
5. ALL MANHOLE JOINTS BELOW THE TOP COVER SECTION SHALL INCLUDE A 6" WIDE (MIN) EXTERIOR JOINT TAPE (WITH PRIMER). TAPE ON THE CONE SECTION IS OPTIONAL. SEE PLATE S-17.
6. IN SILTS, CLAY OR HIGHLY ORGANIC SOILS (FINE-GRAINED SOILS INCLUDING SOIL GROUPS ML, CL, OL, MH, CH, OH AND PT) THE SOILS SHALL BE OVER-EXCAVATED AN ADDITIONAL 24" (AT A MIN.) AND BACKFILLED WITH AASHTO CLASS A-3 SOIL (COMPACTED TO 98%, ASTM D1557) OR OVER-EXCAVATE AN ADDITIONAL 12" (AT A MIN.) AND BACKFILL WITH GRANULAR BACKFILL (57 STONE).

SANITARY SEWER TYPE "A" MANHOLE
8"-21" SEWERS

JANUARY 2020 — PLATES S-2, S-3

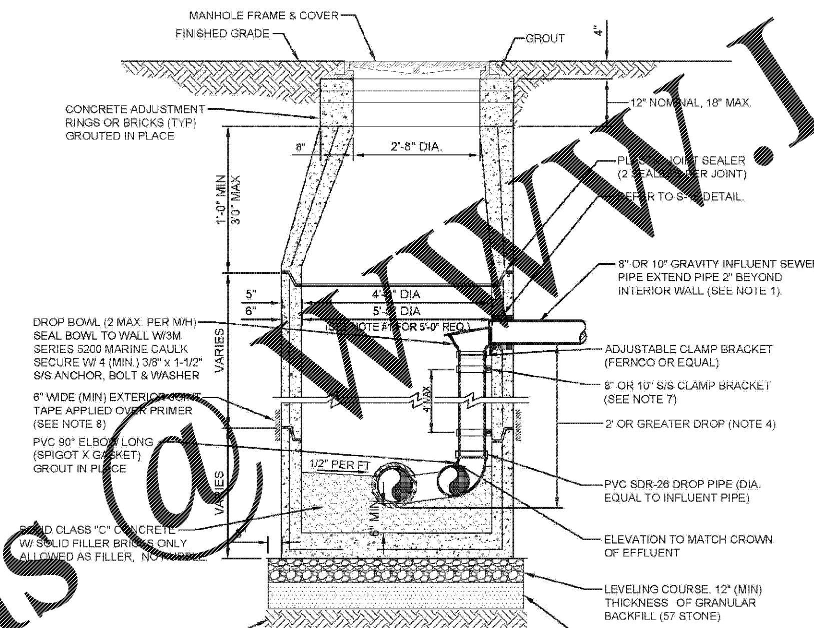

SECTION VIEW (S-4)

(FOR PLAN VIEW SEE S-5)

NOTES:

1. THIS ASSEMBLY IS FOR 8" OR 10" GRAVITY INFLUENT LINES ONLY. NO DROPS ALLOWED FOR FORCE MAINS. MAXIMUM OF 2 INSIDE DROP BOWLS PER MANHOLE. A 5'-0" DIA. MANHOLE (6" THICK WALLS) IS REQUIRED IF TWO INSIDE DROPS ARE CONSTRUCTED WITH ONE OR BOTH BEING 10" SIZE. DROP BOWL BY RELINER OR APPROVED EQUAL REQUIRED. THE INSIDE DROP FOR AN 8" HIGH-LINE SHALL BE CONSTRUCTED SIMILAR TO ABOVE (SEE PLATE S-5).
2. PRECAST MANHOLE SECTIONS TO BE MANUFACTURED IN ACCORDANCE WITH THE LATEST EDITIONS OF A.S.T.M. C-478 WITH 4000 LB. CONC., TYPE II CEMENT. ALL LIFTING HOLES AND OUTSIDE INSERTS SHALL BE FILLED WITH NON-SHRINK GROUT AND COATED WITH BITUMINOUS WATERPROOFING MATERIAL.
3. THE INTERIOR AND EXTERIOR OF MANHOLE AND THE INTERIOR OF ADJUSTMENT RINGS SHALL BE GIVEN TWO COATS OF BITUMINOUS WATERPROOFING MATERIAL.
4. TYPE "B" MANHOLE MUST BE USED FOR 2' OR GREATER INFLUENT PIPE DROPS.
5. THE DROP BOWL ASSEMBLY SHALL BE INSTALLED PRIOR TO APPLICATION OF SPECIALTY LINING MATERIAL.
6. A TYPE "D" MANHOLE SHALL BE UTILIZED WHEN THREE OR MORE (2' OR GREATER) DROPS ARE INVOLVED OR WHEN INFLUENT PIPES AREA LARGER THAN 10" IN SIZE.
7. ADJUSTABLE CLAMPING BRACKET (MIN. 2 PER DROP BOWL ASSY). 1-1/2" WIDE, 11 GA. W/ 3/8" DIA. 18-8 PINCH BOLTS AND NUTS. SECURE TO M/H WALL WITH (2) 3/8" X 1" BOLT, ANCHOR & WASHER PER BRACKET ASSY. ALL 304 OR 316 STAINLESS STEEL MATERIALS.
8. ALL M/H JOINTS BELOW THE TOP CONE SECTION SHALL INCLUDE A 6" WIDE (MIN) EXTERIOR JOINT TAPE (W/PRIMER). TAPE ON THE CONE SECTION IS OPTIONAL.
9. IN SILTS, CLAY OR HIGHLY ORGANIC SOILS (FINE-GRAINED SOILS INCLUDING SOIL GROUPS ML, CL, OL, MH, CH, OH AND PT) THE SOILS SHALL BE OVER-EXCAVATED AN ADDITIONAL 24" (AT A MIN.) AND BACKFILLED WITH AASHTO CLASS A-3 SOIL (COMPACTED TO 98%, ASTM D1557) OR OVER-EXCAVATE AN ADDITIONAL 12" (AT A MIN.) AND BACKFILL WITH GRANULAR BACKFILL (57 STONE).

SANITARY SEWER TYPE "B" MANHOLE
8"-10" SEWERS

JANUARY 2020 — PLATES S-4, S-5

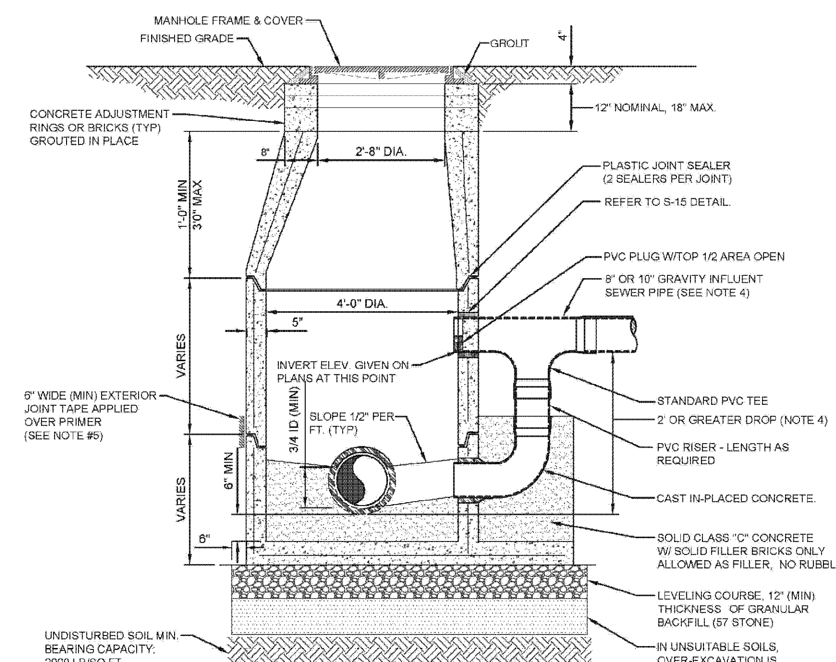

SECTION VIEW (S-7)

(FOR PLAN VIEW SEE S-8)

NOTES:

1. PRECAST MANHOLE SECTIONS TO BE MANUFACTURED IN ACCORDANCE WITH THE LATEST EDITIONS OF A.S.T.M. C-478 WITH 4000 LB. CONC., TYPE II CEMENT. ALL LIFTING HOLES AND OUTSIDE INSERTS SHALL BE FILLED WITH NON-SHRINK GROUT AND COATED WITH BITUMINOUS WATERPROOFING MATERIAL.
2. THE INTERIOR AND EXTERIOR OF MANHOLE AND THE INTERIOR OF THE ADJUSTMENT RINGS SHALL BE GIVEN TWO COATS OF BITUMINOUS WATERPROOFING MATERIAL.
3. IF SPECIALTY LINER IS TO BE INSTALLED ON INSIDE SURFACE OF MANHOLE, THE BITUMINOUS WATERPROOFING SHALL BE, OMITTED ON INSIDE.
4. TYPE "D" MANHOLE SHALL BE USED FOR 12" OR LARGER INFLUENT PIPES W/ 2' OR GREATER INFLUENT DROP.
5. ALL M/H JOINTS BELOW THE TOP CONE SECTION SHALL INCLUDE A 6" WIDE (MIN) EXTERIOR JOINT TAPE (W/PRIMER). TAPE ON THE CONE SECTION IS OPTIONAL.
6. IN SILTS, CLAY OR HIGHLY ORGANIC SOILS (FINE-GRAINED SOILS INCLUDING SOIL GROUPS ML, CL, OL, MH, CH, OH AND PT) THE SOILS SHALL BE OVER-EXCAVATED AN ADDITIONAL 24" (AT A MIN.) AND BACKFILLED WITH AASHTO CLASS A-3 SOIL (COMPACTED TO 98%, ASTM D1557) OR OVER-EXCAVATE AN ADDITIONAL 12" (AT A MIN.) AND BACKFILL WITH GRANULAR BACKFILL (57 STONE).

SANITARY SEWER TYPE "D" MANHOLE
12"-21" SEWERS

JANUARY 2020 — PLATES S-7, S-8

C-19

NO.	BY	DATE	REVISIONS
6.			
5.			
4.			
3.			
2.			
1.			

DESIGN ENGINEER

FLORIDA REGISTRATION NO.

DESIGNER:
DRAWN BY:
DATE:
CHECKED BY:
DATE:

JEA Building Community

JEA STANDARD
SANITARY SEWER DETAILS

PROJ. NO.
DATE: JANUARY 2020
SCALE: AS NOTED

NO. SHEETS 1
SHEET NO. 5
DRAWING NO. S-STD-1

Order Plans @ WWW.LDILine.com

Current Layout Tab = 01 Wed Apr 15, 2020 - 08:31