NOTES:

1. INTENTION OF SPLICE CONNECTION IS TO CREATE A CONTINUOUS ROOF ANGLE OR BENT PL. WITH INDIVIDUAL FABRICATED STEEL PIECES.
2. DO NOT USE SPLICE CONNECTION AT EXPANSION JOINTS

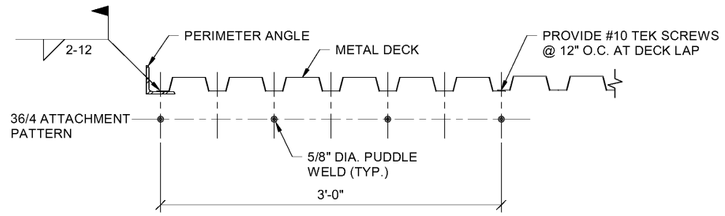

D1 TYPICAL METAL DECK FASTENER LAYOUT
SCALE: N.T.S.

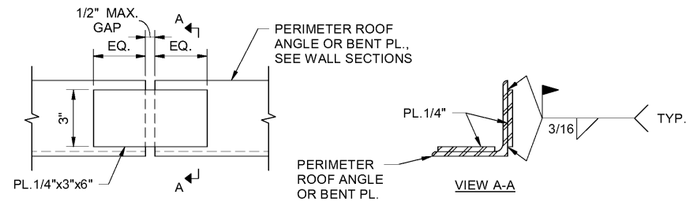

D3 TYPICAL ROOF ANGLE SPLICE
SCALE: N.T.S.

NOTE: JOIST MANUFACTURER SHALL PROVIDE APPROVAL FOR ALL CONDITIONS WITH HANGING LOADS GREATER THAN 100 lb.

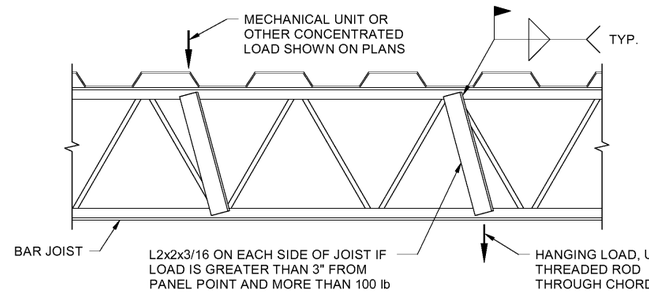

B1 TYPICAL JOIST REINFORCEMENT
SCALE: N.T.S.

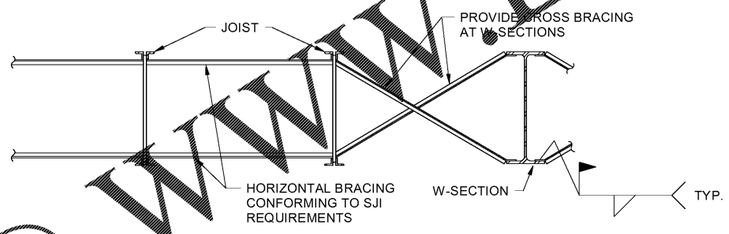

B3 TYPICAL JOIST BRACING
SCALE: N.T.S.

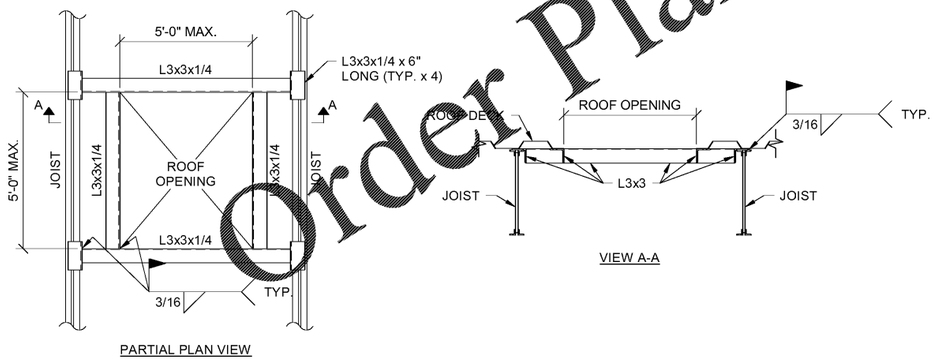

A1 TYPICAL ROOF DECK OPENING
SCALE: N.T.S.

Order Plans @ WWW.LDILine.com

Copyright © 2020 by Pond & Company. All rights reserved. No copying or duplication of these documents is allowed without the express written agreement of Pond & Company.

CONSTRUCTION DOCUMENTS

NORFOLK SOUTHERN

MARK	DESCRIPTION	DATE

DESIGNED BY: MWH
DRAWN BY: MWH
CHECKED BY: BN
SUBMITTED BY: ERA
ISSUED FOR CONSTRUCTION: 13-07-2020

DIMENSIONS ARE IN INCHES UNLESS OTHERWISE SPECIFIED
DOCUMENT CLASSIFICATION BUSINESS IS AND STORAGE BY:
TYPE OF CONSTRUCTION TYPE IS - NONCOMBUSTIBLE
"FOR NFPA 409 & 2-HR SEPARATION IS PROVIDED BETWEEN THE HANGAR AND THE OFFICE"

NORFOLK SOUTHERN CORP
1200 PEACHTREE STREET, NE
ATLANTA, GEORGIA 30309

POND
3500 Parkway Lane, Suite 500
Peachtree Corners, GA 30092
Phone (678) 336-7140
Fax (678) 336-7744
JOB NO. 1190557

CORPORATE AIRCRAFT HANGAR FOR NORFOLK SOUTHERN CORPORATION
FULTON COUNTY AIRPORT - BROWN FIELD (FTY)
3952 AVIATION CIRCLE, SUITE 200
ATLANTA, GEORGIA 30336

TYPICAL DETAILS

SHEET ID
S-504

7/13/2020 10:57:56 AM BIM 360://1190557 - Pegasus/1190557_Pegasus_NS_Struct_v19.rvt