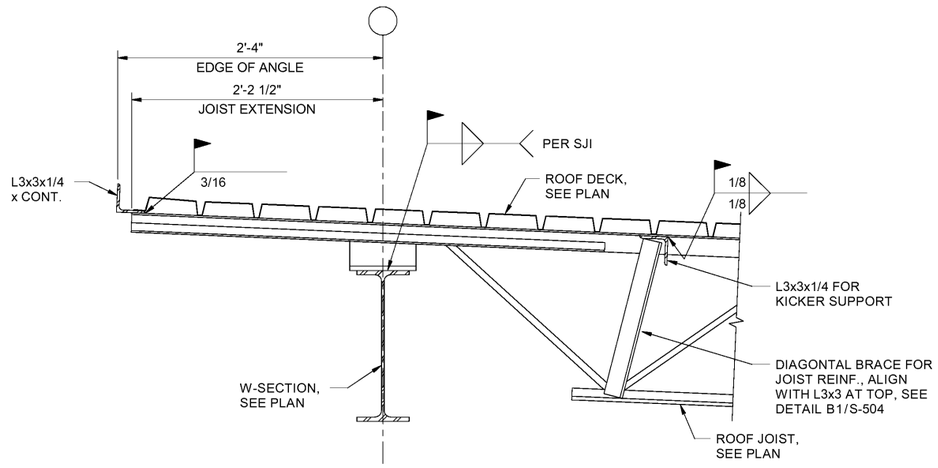

C1 ROOF SECTION AT JOIST
SCALE: N.T.S.

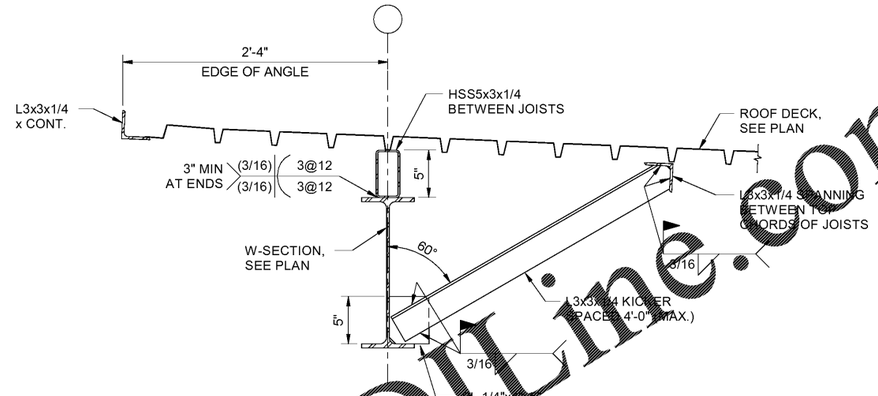

C3 ROOF SECTION AT KICKERS
SCALE: N.T.S.

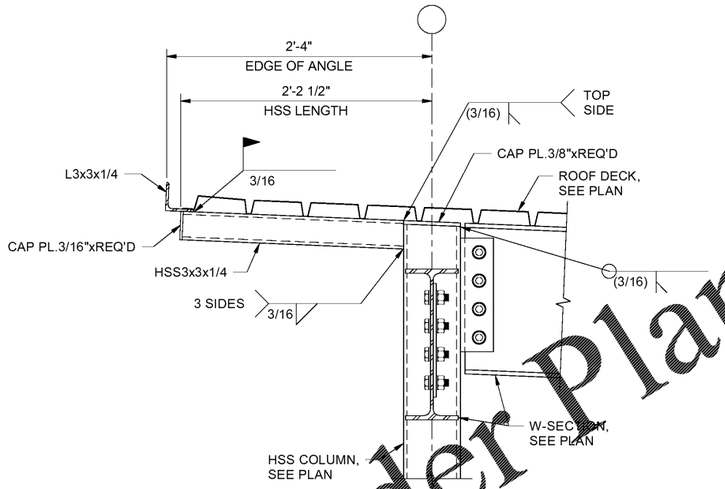

A1 ROOF SECTION AT COLUMN
SCALE: N.T.S.

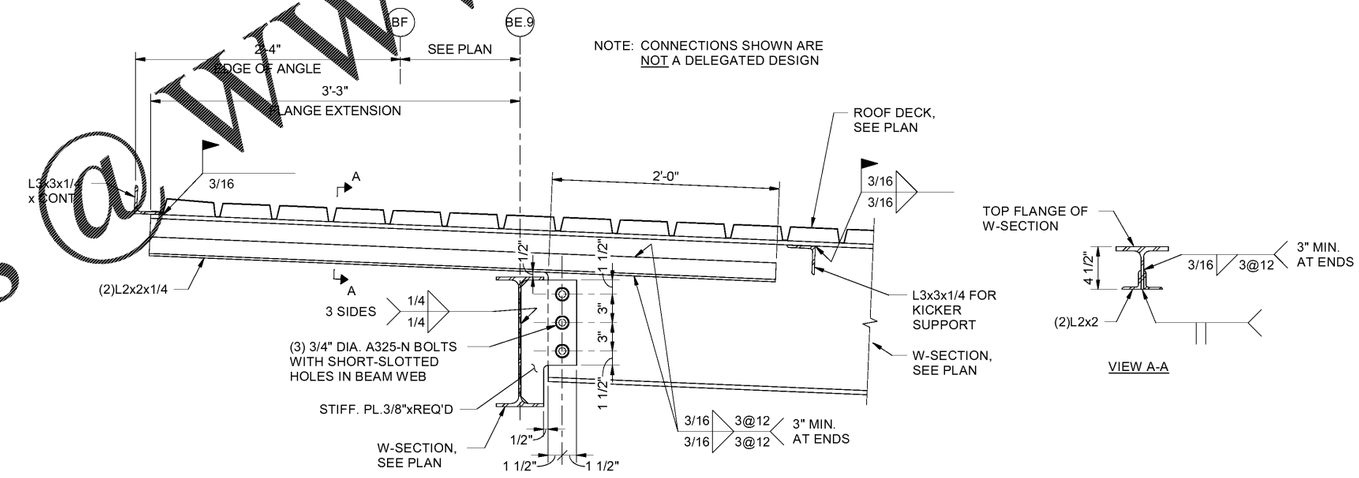

A3 ROOF SECTION W-SECTION FLANGE EXTENSION
SCALE: N.T.S.

Order Plans @ WWW.LDILine.com

NORFOLK SOUTHERN

MARK	DESCRIPTION	DATE

DESIGNED BY: MWH
DRAWN BY: MWH
CHECKED BY: BN
SUBMITTED BY: ERA
ISSUED FOR CONSTRUCTION: 13-07-2020

NORFOLK SOUTHERN CORP
1200 PEACHTREE STREET, NE
ATLANTA, GEORGIA 30309

POND
3500 Parkway Lane, Suite 500
Peachtree Corners, GA 30092
Phone (678) 336-7740
Fax (678) 336-7744
JOB NO. 1190557

CORPORATE AIRCRAFT HANGAR FOR NORFOLK SOUTHERN CORPORATION
FULTON COUNTY AIRPORT - BROWN FIELD (FTY)
3952 AVIATION CIRCLE, SUITE 200
ATLANTA, GEORGIA 30336

DETAILS

SHEET ID
S-312

Copyright © 2020 by Pond & Company. All rights reserved. No copying or duplication of these documents is allowed without the express written agreement of Pond & Company.

CONSTRUCTION DOCUMENTS

7/13/2020 10:57:39 AM BIM 360://1190557 - Pegasus/1190557_Pegasus_NS_Struct_v19.rvt