HOOD INFORMATION – Job#4353855

HOOD NO.	TAG	MODEL	LENGTH	MAX. COOKING TEMP.	TYPE	APPLIANCE DUTY	DESIGN CFM/ft	TOTAL EXH. CFM	EXHAUST PLENUM RISER(S) WIDTH	LENG.	HEIGHT	DIA.	CFM	VEL.	S.P.	TOTAL SUPPLY CFM	HOOD CONSTRUCTION	HOOD CONFIG. END TO END	ROW
1	GH-1	6624 ND-2-PSP-F	16' 0"	600 Deg.	I	Heavy	224	3580	10"	17"	4"		1790	1516	-0.647"	2150	430 SS Where Exposed	ALONE	ALONE
									10"	17"	4"		1790	1516	-0.647"				

PATENT NUMBERS

AC-PSP (United States) – US Patent 7963830 B2
AC-PSP Wall (Canada) – CA Patent 2820509
AC-PSP Island (Canada) – CA Patent 2520330

HOOD INFORMATION

HOOD NO.	TAG	FILTER(S) TYPE	QTY.	HEIGHT	LENGTH	EFFICIENCY @ 7 MICRONS	LIGHT(S) QTY.	TYPE	WIRE GUARD	LOCATION	SIZE	UTILITY CABINET(S) FIRE SYSTEM TYPE	SIZE	ELECTRICAL MODEL #	SWITCHES QUANTITY	FIRE SYSTEM PIPING	HOOD HANGING WGHT
1	GH-1	Captrate Solo Filter	12	20"	16"	85% See Filter Spec.	4	12" x 12" LED	NO	Right	20"x66"x24"	Ansul R102	3.0/3.0/3.0/3.0	DCV-1111-24VDCBMS	1 Light 1 Fan	YES	1030 LBS

HOOD OPTIONS

HOOD NO.	TAG	OPTION
1	GH-1	FIELD WRAPPER 18.00" High Front, Right
		LEFT END STANDOFF (FINISHED) 3" Wide 66" Long Insulated
		RIGHT QUARTER END PANEL 23" Top Width, 0" Bottom Width, 23" High 430 SS
		RISER SENSOR INSTALL 3IN DBL

PERFORATED SUPPLY PLENUM(S)

HOOD NO.	TAG	POS.	LENGTH	WIDTH	HEIGHT	TYPE	RISER(S) WIDTH	LENG.	DIA.	CFM	S.P.
1	GH-1	Front	215"	12"	6"	MUA	8"	26"		537	0.182"
						MUA	8"	26"		537	0.182"
						MUA	8"	26"		537	0.182"
						MUA	8"	26"		537	0.182"

EXHAUST FAN INFORMATION – Job#4353855

FAN UNIT NO.	TAG	FAN UNIT MODEL #	CFM	ESP.	RPM	MOTOR ENCL.	H.P.	B.H.P.	ø	VOLT	FLA	DISCHARGE VELOCITY	WEIGHT (LBS.)	SONES
1	F-1 GH-1	DU180HFA	3580	1.375	1401	ODP,PREMIUM	3.000	1.4790	3	208	9.5	827 FPM	186	22
2	F-2 BAKERY OVEN	DU33HFA	530	1.000	1545	TEAO-ECM	0.333	0.2510	1	115	4.3	262 FPM	67	15.6
3	F-3 BAKERY OVEN	DU33HFA	530	1.000	1545	TEAO-ECM	0.333	0.2510	1	115	4.3	262 FPM	67	15.6
4	F-4 EMPLOYEE RR	DR12HFA	550	0.300	1444	TEAO-ECM	0.250	0.1290	1	115	2.9		51	9.1
5	F-5 CUSTOMER RR	DR33HFA	750	0.500	1479	TEAO-ECM	0.333	0.2180	1	115	4.3		59	12.1
6	F-6 SCULLERY	DU12HFA	500	0.500	1645	TEAO-ECM	0.250	0.1720	1	115	2.9	355 FPM	54	10.5
7	F-7 MOTOR VENT	DR12HFA	500	0.500	1538	TEAO-ECM	0.250	0.1560	1	115	2.9		51	10.2
8	F-8 MOTOR PURGE	DR180HFA	3550	0.500	1265	ODP,PREMIUM	2.000	1.5640	3	208	8.3		196	19.9

CONDENSER DETAILS

FAN UNIT NO.	TAG	FAN UNIT MODEL #	CONDENSER NO.	TONNAGE	VOLTAGE	PHASE	FREQUENCY	MCA	RLA	MAX. FUSE SIZE	MIN. WIRE SIZE	SEER
9	SF-1	A1-D.250-G10-MPU	1	2.5	208-230	3 PHASE	60 Hz	11.2 Amps	9.07 Amps	20 Amps	14 AWG	14
			2	2.5	208-230	3 PHASE	60 Hz	11.2 Amps	9.07 Amps	20 Amps	14 AWG	14

MUA FAN INFORMATION – Job#4353855

FAN UNIT NO.	TAG	FAN UNIT MODEL #	BLOWER	HOUSING	MIN CFM	DESIGN CFM	ESP.	RPM	MOTOR ENCL.	H.P.	B.H.P.	ø	VOLT	FLA	MCA	MOCP	COOLING COIL ENTERING DB TEMP.	COOLING COIL ENTERING WB TEMP.	COOLING COIL LEAVING DB TEMP.	COOLING COIL LEAVING WB TEMP.	COOLING COIL TOTAL CAPACITY	COOLING COIL SENSIBLE CAPACITY	COOLING COIL LATENT CAPACITY	WEIGHT (LBS.)	SONES
9	SF-1	A1-D.250-G10-MPU	G10	A1-D.250	1000	2150	0.500	1316	ODP	2.000	1.2970	3	208	5.9	7.4A	15A	91.0°F	74.0°F	73.9°F	66.7°F	55.9 MBH	37.4 MBH	18.5 MBH	1171	25

GAS FIRED MAKE-UP AIR UNIT(S)

FAN UNIT NO.	TAG	INPUT BTUs	OUTPUT BTUs	TEMP. RISE	REQUIRED INPUT GAS PRESSURE	GAS TYPE	BURNER EFFICIENCY(%)
9	SF-1	120261	110640	50 deg F	7 in. w.c. – 14 in. w.c.	Natural	92

FAN OPTIONS

FAN UNIT NO.	TAG	OPTION (Qty. – Descr.)
1	F-1 GH-1	1 – Grease Box
		1 – Miami Dade Certification – NOA-1 Aluminum Upblast
		1 – Hinge Kit – Ships Loose for Curb Supplied by Others
2	F-2 BAKERY OVEN	1 – Miami Dade Certification – NOA-1 Aluminum Upblast
		1 – ECM Wiring Package – Manual or 0-10VDC Reference Speed Control (TELCO Motor), CCW Rotation
		1 – SCR-11 Bird Screen
		1 – I 15-BDD Damper
3	F-3 BAKERY OVEN	1 – Miami Dade Certification – NOA-1 Aluminum Upblast
		1 – ECM Wiring Package – Manual or 0-10VDC Reference Speed Control (TELCO Motor), CCW Rotation
		1 – SCR-11 Bird Screen
		1 – I 15-BDD Damper
4	F-4 EMPLOYEE RR	1 – ECM Wiring Package – Manual or 0-10VDC Reference Speed Control (TELCO Motor), CCW Rotation
		1 – I 12-BDD Damper
		1 – Miami Dade Certification – NOA-1 Aluminum Downblast 10.
5	F-5 CUSTOMER RR	1 – I 15-BDD Damper
		1 – ECM Wiring Package – Manual or 0-10VDC Reference Speed Control (TELCO Motor), CCW Rotation
		1 – Miami Dade Certification – NOA-1 Aluminum Downblast 11.
6	F-6 SCULLERY	1 – ECM Wiring Package – Exhaust – Manual or 0-10VDC Reference Speed Control -MSC- (TELCO), CCW Rotation
		1 – SCR-12 Bird Screen
		1 – Miami Dade Certification – NOA-1 Aluminum Upblast
		1 – I 12-BDD Damper
7	F-7 MOTOR VENT	1 – ECM Wiring Package – Manual or 0-10VDC Reference Speed Control (TELCO Motor), CCW Rotation
		1 – I 12-BDD Damper
		1 – Miami Dade Certification – NOA-1 Aluminum Downblast 10.
8	F-8 MOTOR PURGE	1 – Miami Dade Certification – NOA-1 Aluminum Downblast 18/20.
		1 – I 23-BDD Damper
		1 – VAV Package w/ Manual Control (VFD Included)
		1 – VFD factory mounted and wired in Exhaust Fan.
		1 – VFD Mounting Bracket for DU/DR 180 – 200.
		1 – Exhaust Fan Heat Baffle
9	SF-1	1 – AC Interlock Relay – 24VAC Coil
		1 – Motorized Backdraft Damper for A1-D Housing
		1 – Low Fire Start
		1 – Inlet Pressure Gauge, 0-35"
		1 – Manifold Pressure Gauge, -5 to 15" wc
		1 – 5 Ton 2 Circuit (2.5/2.5) Modular Packaged Cooling Option for Size 1 DF/EH MUA (1,800 to 3,000 cfm), 208V/230V, 3 phase. Cooling Thermostat or Programmable Stat Required for Proper Operation.
		1 – Downturn Plenum for Size 1 DX Coil Module
		1 – Cooling Thermostat and Relay (Not req for evap)
		1 – Miami Dade Certification – NOA-2 Supply
		1 – Separate 120V Wiring Package (Required and used only for DCV or Prewire with VFD) – Three Phase Only

CURB ASSEMBLIES

NO.	ON FAN	TAG	WEIGHT	ITEM	SIZE
1	# 1	F-1 GH-1	55 LBS	Curb	26.500"W x 26.500"L x 18.000"H Insulated 16 Gauge
2	# 2	F-2 BAKERY OVEN	33 LBS	Curb	19.500"W x 19.500"L x 18.000"H Insulated 16 Gauge
3	# 3	F-3 BAKERY OVEN	33 LBS	Curb	19.500"W x 19.500"L x 18.000"H Insulated 16 Gauge
4	# 4	F-4 EMPLOYEE RR	37 LBS	Curb	17.500"W x 17.500"L x 18.000"H Insulated 16 Gauge
5	# 5	F-5 CUSTOMER RR	33 LBS	Curb	19.500"W x 19.500"L x 18.000"H Insulated 16 Gauge
6	# 6	F-6 SCULLERY	37 LBS	Curb	17.500"W x 17.500"L x 18.000"H Insulated 16 Gauge
7	# 7	F-7 MOTOR VENT	37 LBS	Curb	17.500"W x 17.500"L x 18.000"H Insulated 16 Gauge
8	# 8	F-8 MOTOR PURGE	55 LBS	Curb	26.500"W x 26.500"L x 18.000"H Insulated 16 Gauge
9	# 9	SF-1	184 LBS	Curb	13.000"W x 13.000"L x 20.000"H Insulated 16 Gauge MPU Curb Clips
10		F-1 EXTENSION	37 LBS	Exhaust Adapter	From 28.000"sq To 26.500"sq x 18.000"H

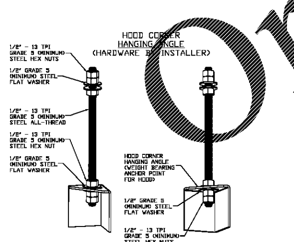

ASSEMBLY INSTRUCTIONS

HANGING ANGLE MUST BE SUPPORTED WITH 1/2" – 13 TPI GRADE 5 (MINIMUM) ALL-THREAD. SANDWICH HANGING ANGLES AND CEILING ANCHOR POINTS WITH 1/2" GRADE 5 (MINIMUM) STEEL FLAT WASHERS AND 1/2" – 13 TPI GRADE 5 (MINIMUM) HEX NUTS AS SHOWN. MUST USE DOUBLED HEX NUT CONFIGURATION BENEATH HOOD HANGING ANGLES AND ABOVE CEILING ANCHORS. MAINTAIN 1/4" OF EXPOSED THREADS BENEATH BOTTOM HEX NUT. TORQUE ALL HEX NUTS TO 57 FT-LBS.

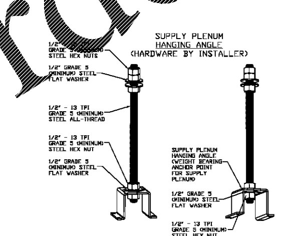

ASSEMBLY INSTRUCTIONS

HANGING ANGLE MUST BE SUPPORTED WITH 1/2" – 13 TPI GRADE 5 (MINIMUM) ALL-THREAD. SANDWICH HANGING ANGLES AND CEILING ANCHOR POINTS WITH 1/2" GRADE 5 (MINIMUM) STEEL FLAT WASHERS AND 1/2" – 13 TPI GRADE 5 (MINIMUM) HEX NUTS AS SHOWN. MUST USE DOUBLED HEX NUT CONFIGURATION ABOVE CEILING ANCHORS. SINGLE HEX NUT BENEATH HANGING ANGLE IS ACCEPTABLE FOR PSP HANGING ANGLES. MAINTAIN 1/4" OF EXPOSED THREADS BENEATH BOTTOM HEX NUT. TORQUE ALL HEX NUTS TO 57 FT-LBS.

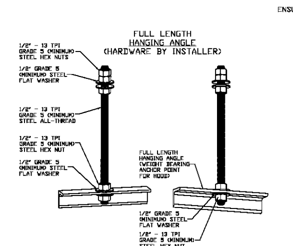

ASSEMBLY INSTRUCTIONS

HANGING ANGLE MUST BE SUPPORTED WITH 1/2" – 13 TPI GRADE 5 (MINIMUM) ALL-THREAD. SANDWICH HANGING ANGLES AND CEILING ANCHOR POINTS WITH 1/2" GRADE 5 (MINIMUM) STEEL FLAT WASHERS AND 1/2" – 13 TPI GRADE 5 (MINIMUM) HEX NUTS AS SHOWN. MUST USE DOUBLED HEX NUT CONFIGURATION ABOVE CEILING ANCHORS. SINGLE HEX NUT BENEATH HANGING ANGLE IS ACCEPTABLE FOR FULL LENGTH HANGING ANGLES. MAINTAIN 1/4" OF EXPOSED THREADS BENEATH BOTTOM HEX NUT. TORQUE ALL HEX NUTS TO 57 FT-LBS.

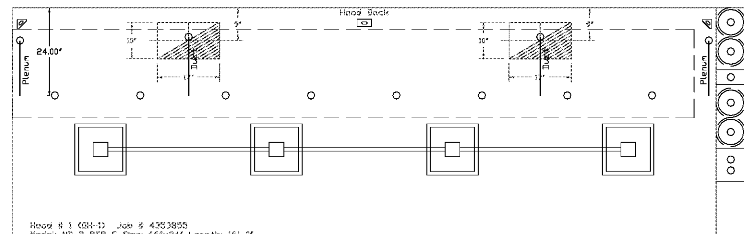

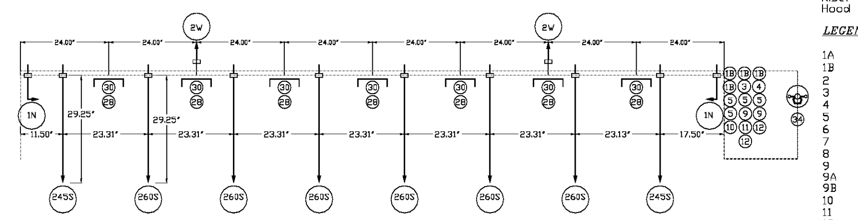

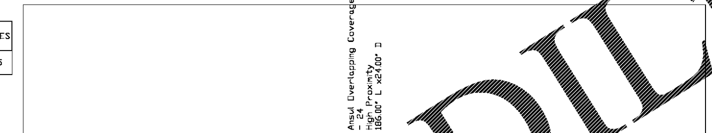

NOTES
- FIELD PIPE DROPS AS SHOWN
  SLEEVING, ELBOWS, TEES, AND NOZZLES SUPPLIED BY CAS
- RELOCATE NOZZLES IF FLOW PATTERN IS BLOCKED BY SHELVING, SALAMANDERS, ETC.
- MAXIMUM 9 ELBOWS IN SUPPLY LINE.
- MINIMUM 72 INCHES OF AGENT LINE FROM TANK TO FIRST NOZZLE COVERING A RANGE, FRYER, OR WOK TO REFLECT GENERAL PIPING REQUIREMENTS.
- IF APPLICABLE, PRE-PIPED CHARBROILER DROPS ARE SHIPPED LOOSE.
- FACTORY PIPING EXTENDS A MAXIMUM OF 6" ABOVE THE TOP OF THE HOOD.

- APPLIANCE DIMENSIONS LISTED REPRESENT THE COOKING SURFACE SIZE, NOT THE OVERALL APPLIANCE SIZE.

- THIS FIRE SYSTEM COMPLIES WITH U.L. 300 REQUIREMENTS

Job #: 4353855
Job Name: Publix – YYYY – East Cobb GA_R1

System Size: ANSUL-3.0/3.0/3.0/3.0 Total FP required: 21
Hood # 1 16' 0.00" Long x 66" Wide x 24" High
Riser # 1 Size: 10" x 17"
Riser # 2 Size: 10" x 17"
Hood # 1 Metal Blow-Off Caps included.

LEGEND – FIRE CABINET ANSUL SYSTEM

1A	1.5 GALLON TANK
1B	3 GALLON TANK
2	OEM AUTOMAN RELEASE
3	OEM REGULATED RELEASE
4	OEM REGULATED ACTUATOR
5	ANSULEX LIQUID AGENT (3 GAL.)
6	ANSULEX LIQUID AGENT (1.5 GAL.)
7	CARTRIDGE (101-20)
8	CARTRIDGE (101-10)
9	CARTRIDGE (101-30)
9A	CARTRIDGE (LT-A-101-30)
9B	DOUBLE TANK CARTRIDGE
10	TEST LINK
11	DOUBLE MICROSWITCH
12	HOSE ASSEMBLY
1W00	DUCT NOZZLE (419313)
2W	DUCT NOZZLE (419337)
1W	NOZZLE ASSEMBLY (419336)
1F	NOZZLE ASSEMBLY (419333)
1N	NOZZLE ASSEMBLY (419335)
1/2N	NOZZLE ASSEMBLY (419334)
3N	NOZZLE ASSEMBLY (419338)
245	NOZZLE ASSEMBLY (419340)
230	NOZZLE ASSEMBLY (419339)
2120	NOZZLE ASSEMBLY (419343)
290	NOZZLE ASSEMBLY (419342)
260	NOZZLE ASSEMBLY (419341)
28	DETECTOR BRACKET
29	LOW TEMP FUSIBLE LINK
30	HIGH TEMP FUSIBLE LINK
MGV	MECHANICAL GAS VALVE
EGV	ELECTRICAL GAS VALVE
34	REMOTE MANUAL PULL STATION
S	SWIVEL ADAPTOR

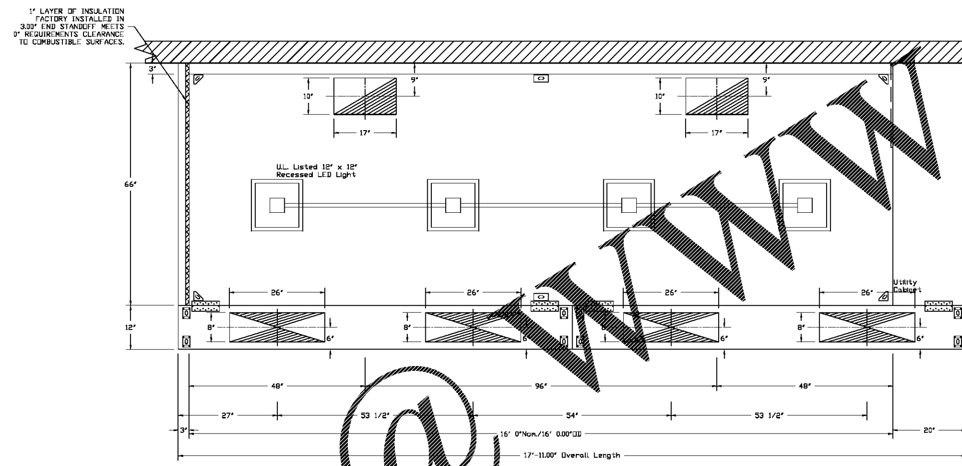

PLAN VIEW – Hood #1 (GH-1)
16' 0.00" LONG 6624ND-2-PSP-F
NOTE: Additional hanging angles provided for hoods 12' and longer.

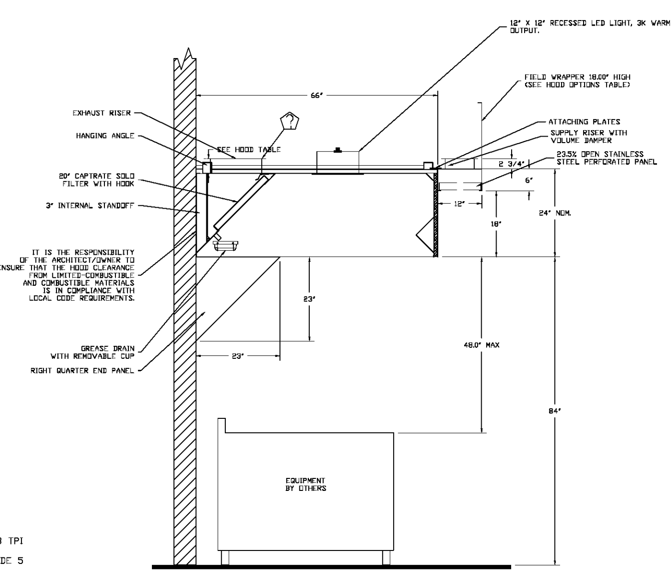

SECTION VIEW – MODEL 6624ND-2-PSP-F
HOOD – #1 (GH-1)

Fire System Information – Job#4353855

FIRE SYSTEM NO.	TAG	TYPE	SIZE	FLOW POINTS	INSTALLATION SYSTEM	LOCATION ON HOOD
1	FS-GH-1	Ansul R102	3.0/3.0/3.0/3.0	22	Fire Cabinet Right	Right

Fire System Parts List Key

FIRE SYSTEM NO.	TAG	KEY NUMBER – PART DESCRIPTION	QTY. BY FACTORY	QTY. BY DIST.
1	FS-GH-1	0 – 0 – 31810 ELBOW 7/16 X 1/4 BRASS ANSUL-FOR Braided Stainless HOSE	1	0
		0 – 0 – 439861 Large BLOWOFF CAP, Metal, to fit New Laser-etched ANSUL Nozzles, A0024201	12	0
		0 – 0 – HOSE HOSE – Stainless Steel Actuation Hose, 42"	1	0
		0 – 0 – Tank Strap Tank Strap – used for ANSUL Tanks	4	0
		0 – 0 – UCTANKBRACKET Tank Bracket for fire system tank installation in utility cabinets	4	0
		1 – 1 – AT – 3.0 TANK(#1B) – 3.0 Gallon SS Tank (for use with Automan Release, Actuator, or SS Enclosure (UL/ULC)) Macola # 01-429862	4	0
		3 – 3 – ANS-OEM REGULATED RELEASE – Ansul Regulated Mechanical Release/Bracket Assembly, OEM, R-102, Cartridge Detection Included, Ansul Part # 79493	1	0
		4 – 4 – ANS-OEMRA ACTUATOR – Regulated, OEM, R-102	1	0
		5 – 5 – LIQ-3.0 AGENT – Ansulex Low PH Wet Chemical Agent, 3 Gallon (UL) 79372	0	4
		9 – 9 – 101-30 CARTRIDGE – Carbon Dioxide, 101-30, Cartridge (R-102) 19-15851	0	2
		10 – 10 – TLINK LINK – Test Link (1 test link) Ansul Part # 24916, Macola # 20-24916	0	1
		11 – 11 – MICRO-SDA MICROSWITCH KIT- Includes 2 switches and Mounting Hardware. Single Dual Electric Switch, One Standard Switch, One Alarm Duty Switch Ansul Part # 437155, Macola # 08-437155	1	0
		12 – 12 – HOSE HOSE – Rubber Hose	2	0
		13 – 13 – 419337 NOZZLE – 2W Nozzle, Duct (Replaces ANSUL Part# 419348, CAS Part# 419337) A0001267	2	0
		16 – 16 – 419335 NOZZLE – 1N Nozzle, Plenum/Appliance (Replaces ANSUL Part# 419346, CAS Part# 419335) A0001265	2	0
		20 – 20 – 419340 NOZZLE – 245 Nozzle, Appliance (Replaces ANSUL Part# 419351, Part# 419340) A0001270	2	0
		24 – 24 – 419341 NOZZLE – 260 Nozzle, Appliance (Replaces ANSUL Part# 419352, CAS Part# 419341) A0001271	6	0
		25 – 25 – 418569 NOZZLE ADAPTOR – Swivel Nozzle Adaptor (Replaces CAS Part # 418569) A0001274	8	0
		26 – 26 – QSA-3/8 QUIK SEAL – 3/8" (UL)	12	0
		27 – 27 – QPSA-1/2 PULLEY SEAL – 1/2" Hood Seal (UL) Ansul Part # 423253, Macola # 32-79768	1	0
		28 – 28 – S-DET DETECTOR – Series (Scissor Linkage) Ansul Part # 435547/435548 (Old # 417369/434480); Macola # 05-417369	7	0
		30 – 30 – ANS-500FL FUSIBLE LINK – 500deg F, R-102 and PIRANHA, Ansul Part # 439232	7	0
		34 – 34 – RPS-A REMOTE PULL STATION – Red composite (without wire rope) 434618 (Old Macola #06-4835)	1	0
		35 – 35 – PE-LT PULLEY ELBOW – Low Temp. Pulley Elbow, Set Screw Type Ansul Part # 415670, Macola # 11-415671	2	0
		36 – 36 – PE-HT PULLEY ELBOW – High Temp Pulley Elbow, Compression Type, Ansul Part # 423251, Macola # 10-45771	1	0

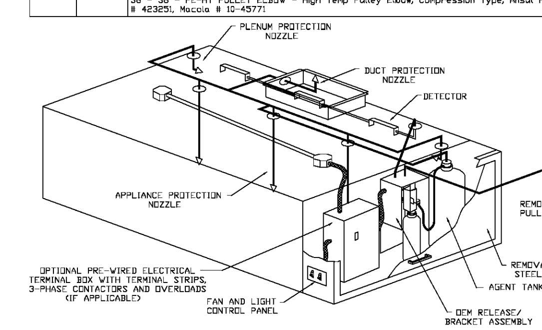

TYPICAL ANSUL R-102 SYSTEM LAYOUT

INCLUDES: FIELD INSTALLATION AND HOOKUP DURING NORMAL BUSINESS HOURS BY CERTIFIED INSTALLERS ONLY IN THE LOCATION NOTED ABOVE, TWO SITE VISITS ONLY (ONE VISIT TO SET PULL STATION & SYSTEM HOOKUP AND ONE VISIT FOR ONE TEST; ADDITIONAL VISITS WILL RESULT IN ADDITIONAL CHARGES), ONE MECHANICAL GAS VALVE PER SYSTEM AT A MAXIMUM SIZE OF 2", PERMIT, AND SYSTEM TEST.
EXCLUDES: UNION LABOR & PREVAILING WAGE (LABOR & WAGES WILL BE ADDED IF APPLICABLE), GAS VALVE INSTALLATION, ELECTRICAL HOOKUP AND CONNECTIONS, HANGING OF FIRE CABINET, SHUNT TRIP, HANDHELD EXTINGUISHER(S), ON-SITE RE-PIPING DUE TO EQUIPMENT LAYOUT CHANGES.

NOTES
- FIELD PIPE DROPS AS SHOWN
  SLEEVING, ELBOWS, TEES, AND NOZZLES SUPPLIED BY CAS
- RELOCATE NOZZLES IF FLOW PATTERN IS BLOCKED BY SHELVING, SALAMANDERS, ETC.
- MAXIMUM 9 ELBOWS IN SUPPLY LINE.
- MINIMUM 72 INCHES OF AGENT LINE FROM TANK TO FIRST NOZZLE COVERING A RANGE, FRYER, OR WOK TO REFLECT GENERAL PIPING REQUIREMENTS.
- IF APPLICABLE, PRE-PIPED CHARBROILER DROPS ARE SHIPPED LOOSE.
- FACTORY PIPING EXTENDS A MAXIMUM OF 6" ABOVE THE TOP OF THE HOOD.

- APPLIANCE DIMENSIONS LISTED REPRESENT THE COOKING SURFACE SIZE, NOT THE OVERALL APPLIANCE SIZE.

SPECIFICATIONS

THE RESTAURANT FIRE SUPPRESSION SYSTEM SHALL BE THE PRE-ENGINEERED TYPE WITH A FIXED NOZZLE AGENT DISTRIBUTION NETWORK. IT SHALL BE LISTED WITH UNDERWRITERS LABORATORIES, INC. (UL)

THE SYSTEM SHALL BE CAPABLE OF AUTOMATIC DETECTION AND ACTUATION WITH LOCAL OR REMOTE MANUAL ACTUATION. ACCESSORIES SHALL BE AVAILABLE FOR MECHANICAL OR ELECTRICAL GAS LINE SHUT-OFF APPLICATIONS.

THE EXTINGUISHING AGENT SHALL BE A POTASSIUM CARBONATE, POTASSIUM ACETATE-BASED FORMULATION DESIGNED FOR FLAME KNOCKDOWN AND SECUREMENT OF GREASE RELATED FIRES. IT SHALL BE AVAILABLE IN PLASTIC CONTAINERS WITH INSTRUCTIONS FOR LIQUID AGENT HANDLING AND USAGE.

THE REGULATED RELEASE MECHANISM SHALL BE COMPATIBLE WITH A FUSIBLE LINK DETECTION SYSTEM. THE FUSIBLE LINK SHALL BE SELECTED AND INSTALLED ACCORDING TO THE OPERATING TEMPERATURE IN THE VENTILATING SYSTEM. THE FUSIBLE LINK SHALL BE SUPPORTED BY A DETECTOR BRACKET/ LINKAGE ASSEMBLY.

Job #: 4353855
Job Name: Publix – Greenwise – YYYY – East Cobb GA_R1

System Size: ANSUL-3.0/3.0/3.0/3.0 Total FP required: 22
Hood # 1 16' 0.00" Long x 60" Wide x 24" High
Riser # 1 Size: 10" x 17"
Riser # 2 Size: 10" x 17"

DWYER ENGINEERING
552 Fort Evans Rd, Suite 200
Leesburg, VA 20176
www.dwyer.com
GA COA #PEF004622
EXPIRES 06/30/2022
PHONE 703-777-5988
EMAIL publix@dwyer.com

THIS DRAWING AND ALL INFORMATION CONTAINED HEREIN IS THE EXCLUSIVE PROPERTY OF FISHER AND ASSOCIATES, AND IS NOT TO BE COPIED OR USED IN ANY WAY WITHOUT THE EXPRESS WRITTEN CONSENT OF FISHER AND ASSOCIATES, LLC. AND MUST BE RETURNED UPON REQUEST. THIS DRAWING IS NOT FOR GENERAL USE OR PUBLICATION. ALL RIGHTS RESERVED.
TO THE BEST OF MY KNOWLEDGE, THE SPECIFICATIONS AND PLANS SHOWN HEREIN COMPLY WITH THE APPLICABLE MINIMUM BUILDING CODES IN EFFECT AT THIS TIME.

PUBLIX PROTOTYPE BASIS OF DESIGN
20M
EXPANDED
RECEIVED: 09.14.18

CORPORATE OFFICES, FACILITIES DESIGN
BOX 407, LAKELAND, FL. 33802
(863) 680-5295
PHYSICAL ADDRESS:
3300 AIRPORT RD., LAKELAND, FL. 33811

Publix SUPER MARKETS

FISHER AND ASSOCIATES, LLC.
ARCHITECTS
PLANNERS
INTERIOR DESIGNERS
AA26000738
2315 BELLEAIR RD. CLEARWATER, FL 33764 727.443.4436

HVAC FAN AND HOOD SCHEDULES & DETAILS
EAST COBB PUBLIX - #1745
EAST COBB CROSSING SHOPPING CENTER
ROSEWELL ROAD
MARIETTA, GA 30062

RELEASED FOR:	
BID	
PERMIT	07/16/20
CONSTR.	

REVISIONS:

07/16/2020

This item has been digitally signed and sealed on date shown using Bluebeam and secure GlobalSign USB key.

M-5

Issue Date: 04-01-20
Project No.: 220006

©COPYRIGHT 2020
Order Plans @ www.LDILine.com