AIR CONDITIONING EQUIPMENT SCHEDULE

OWNER FURNISHED/CONTRACTOR INSTALLED

BASIC UNIT						COOLING COILS W/O SUBCOOLING													BASIC UNIT					
									POWER															
									BLOWER		COMPRESSOR		CONDENSER											
UNIT	MODEL #	AREA SERVED	CFM	O/A CFM	EXT. S.P. (IN. H2O)	EAT(DB/WB)	TOTAL BTUH	SENS. BTUH	LAT (DB/WB)	NOM. HP	RLA/FLA	QTY.	RLA (EA.)	QTY. OF FANS	HP	RLA/FLA (EA.)	VOLT/PH/HZ.	MCA	MOCP	EER	IEER	SEER	REFR.	WEIGHT	NOTES
AC-2	LGH060H4E	VESTIBULES	1800	300	1	78.6/65.1	61700	43800	56.1/53.4	1	7.4	1	16.5	1	0.33	4.1	208/3/60	33	45	12.7	--	17.1	R-410A	875	2,3,4,5,6,7,8
AC-3	LGH060H4E	PHARMACY/OFFICES	2000	400	1.25	77.9/66.2	63200	46800	56.2/55.8	1	7.4	1	16.5	1	0.33	4.1	208/3/60	33	45	12.7	--	17.1	R-410A	875	2,3,4,5,6,8
AC-4	LGH074H4T	BAKERY	2400	400	1	78.8/66.6	72400	57200	56.7/56.4	2	7.5	1	17.6	1	0.33	2.4	208/3/60	32	45	12.0	16.0	--	R-410A	925	2,3,4,5,6,8
AC-5	LGH092H4B	DELI	2600	500	1	79.4/65.5	90300	62900	57.0/53.5	2	7.5	2	11.6	2	0.33	2.4	208/3/60	39	45	12.5	13.0	--	R-410A	1250	1,2,3,4,5,6,7,8
AC-6	LGH102H4B	RECEIVING/STORAGE	3000	500	1.5	79.1/64.5	101300	72800	56.6/54.1	2	7.5	2	11.0	2	0.33	2.4	208/3/60	38	45	12.2	12.9	--	R-410A	1250	1,2,3,4,5,6,7,8

NOTES:

1) SHALL HAVE MULTIPLE COMPRESSORS
2) WIRE SIZE FOR ALL LENNOX UNITS SHALL BE SUITABLE FOR AT LEAST 167°F.
3) THERMOSTATS, HUMIDISTATS, AND OTHER EXTERNAL CONTROLS ARE PROVIDED BY PUBLIX AND INSTALLED BY THE ELECTRICAL CONTRACTOR.
4) ALL UNITS ARE CURB MOUNTED. CURBS ARE MANUFACTURED BY AES INDUSTRIES, INC. ALL CURBS ARE FURNISHED BY PUBLIX AND INSTALLED BY CONTRACTOR.
5) PROVIDE RTU WITH CONDENSATE DRAIN PAN FLOAT SWITCH WHICH WILL SECURE THE UNIT WHEN CONDENSATE WATER LEVEL RISES ABOVE SETPOINT. UNIT SHALL ALERT THE EMS OF HIGH WATER LEVEL.
6) DISCONNECT AND STARTER SWITCH FURNISHED BY AC EQUIPMENT SUPPLIER.
7) WITH HUMIDITROL OPTION WITH LENNOX HUMIDITY SENSOR.
8) PROVIDE MOTORIZED OA DAMPER WITH A 24V ACTUATOR. DAMPER SHALL FULL CLOSE DURING THE UNOCCUPIED MODE.

HVAC VENTILATION CALCULATIONS

AC-1 Sales Area

Zone Description	Zone Area Az (sq.ft.)	Area OA Rate Ra cfm/sq.ft.	Area OA Az x Ra (cfm)	Occupant Load Rate (ppl/1000 sf)	Occupant Load Pz (people)	Occupant OA Rate Rp (cfm/pers)	Occupant OA Rp x Pz (cfm)	Breathing Zone OA Vbz (cfm)	Zone Air Dist Eff Ez	Zone OA Voz (cfm)	Zone Supply Air Vpz (cfm)	OA Fraction Zp	Zone Vent Efficiency Evz
Main Sales	21763	0.06	1306	8	175	7.5	1313	2618	0.8	3273	11800	0.277	0.931
Deli Island	858	0.06	51	5	5	7.5	36	89	0.8	111	1200	0.093	1.116
TOTAL	22621		1357		180		1350	2707		3384	13000	0.277	0.931

Occupant Diversity	D	1.00	
Uncorrected OA	Vou	2707	D x ∑ all zones RpPz + ∑ all zones AzRa
Average OA Fraction	Xs	0.208	Per ASHRAE 62.1-2012 Appendix A
Ventilation Efficiency	Ev	0.93	From 62.1-2012 Appendix A equation A-3, or 0.87 from Table 403.3.2.3.2
Ventilation Eff. Used	Ev	0.93	Select the largest of the two Ev values above

TOTAL REQUIRED OA	Vot	2908	cfm
MIN. OA PROVIDED		4500	cfm

AC-2 Vestibule

Zone Description	Zone Area Az (sq.ft.)	Area OA Rate Ra cfm/sq.ft.	Area OA Az x Ra (cfm)	Occupant Load Rate (ppl/1000 sf)	Occupant Load Pz (people)	Occupant OA Rate Rp (cfm/pers)	Occupant OA Rp x Pz (cfm)	Breathing Zone OA Vbz (cfm)	Zone Air Dist Eff Ez	Zone OA Voz (cfm)	Zone Supply Air Vpz (cfm)	OA Fraction Zp	Zone Vent Efficiency Evz
Entry Vestibule	539	0.06	32	10	6	5	30	62	0.8	78	600	0.130	0.936
Exit Vestibule	186	0.06	11	10	2	5	10	21	0.8	26	600	0.044	1.022
Cart Storage	289	0.12	35	0	0	0	0	35	0.8	43	600	0.072	0.993
TOTAL	1013		78		8		40	118		148	1800	0.130	0.936

Occupant Diversity	D	1.00	
Uncorrected OA	Vou	118	D x ∑ all zones RpPz + ∑ all zones AzRa
Average OA Fraction	Xs	0.066	Per ASHRAE 62.1-2012 Appendix A
Ventilation Efficiency	Ev	0.94	From 62.1-2012 Appendix A equation A-3, or 1.00 from Table 403.3.2.3.2
Ventilation Eff. Used	Ev	1.00	Select the largest of the two Ev values above

TOTAL REQUIRED OA	Vot	118	cfm
TOTAL OA PROVIDED		300	cfm

AC-3 Pharmacy/Offices

Zone Description	Zone Area Az (sq.ft.)	Area OA Rate Ra cfm/sq.ft.	Area OA Az x Ra (cfm)	Occupant Load Rate (ppl/1000 sf)	Occupant Load Pz (people)	Occupant OA Rate Rp (cfm/pers)	Occupant OA Rp x Pz (cfm)	Breathing Zone OA Vbz (cfm)	Zone Air Dist Eff Ez	Zone OA Voz (cfm)	Zone Supply Air Vpz (cfm)	OA Fraction Zp	Zone Vent Efficiency Evz
Cash Room	108	0.06	6	5	1	5	5	11	0.8	14	200	0.072	1.026
Training	138	0.06	8	5	1	5	5	13	0.8	17	200	0.083	1.015
General Office	376	0.06	23	5	2	5	10	33	0.8	41	500	0.082	1.016
Store Manager Office	105	0.06	6	5	1	5	5	11	0.8	14	200	0.071	1.028
Public Restrooms	426	0	0	0	0	0	0	0	0.8	0	250	0.000	1.098
Pharmacy	586	0.18	105	5	3	5	15	120	0.8	151	600	0.251	0.847
Pharmacy Office	36	0.06	2	5	1	5	5	7	0.8	9	50	0.179	0.919
TOTAL	1777		151		9		45	196		245	2000	0.251	0.847

Occupant Diversity	D	1.00	
Uncorrected OA	Vou	196	D x ∑ all zones RpPz + ∑ all zones AzRa
Average OA Fraction	Xs	0.098	Per ASHRAE 62.1-2012 Appendix A
Ventilation Efficiency	Ev	0.85	From 62.1-2012 Appendix A equation A-3, or 0.90 from Table 403.3.2.3.2
Ventilation Eff. Used	Ev	0.90	Select the largest of the two Ev values above

TOTAL REQUIRED OA	Vot	218	cfm
TOTAL OA PROVIDED		400	cfm

AC-4 Bakery

Zone Description	Zone Area Az (sq.ft.)	Area OA Rate Ra cfm/sq.ft.	Area OA Az x Ra (cfm)	Occupant Load Rate (ppl/1000 sf)	Occupant Load Pz (people)	Occupant OA Rate Rp (cfm/pers)	Occupant OA Rp x Pz (cfm)	Breathing Zone OA Vbz (cfm)	Zone Air Dist Eff Ez	Zone OA Voz (cfm)	Zone Supply Air Vpz (cfm)	OA Fraction Zp	Zone Vent Efficiency Evz
Bakery Prep	1208	0.06	72	5	7	7.5	53	125	0.8	156	2400	0.065	0.987
TOTAL	1208		72		7		53	125		156	2400	0.065	0.987

Occupant Diversity	D	1.00	
Uncorrected OA	Vou	125	D x ∑ all zones RpPz + ∑ all zones AzRa
Average OA Fraction	Xs	0.052	Per ASHRAE 62.1-2012 Appendix A
Ventilation Efficiency	Ev	0.99	From 62.1-2012 Appendix A equation A-3, or 1.00 from Table 403.3.2.3.2
Ventilation Eff. Used	Ev	1.00	Select the largest of the two Ev values above

TOTAL REQUIRED OA	Vot	125	cfm
TOTAL OA PROVIDED		400	cfm

AC-5 Deli

Zone Description	Zone Area Az (sq.ft.)	Area OA Rate Ra cfm/sq.ft.	Area OA Az x Ra (cfm)	Occupant Load Rate (ppl/1000 sf)	Occupant Load Pz (people)	Occupant OA Rate Rp (cfm/pers)	Occupant OA Rp x Pz (cfm)	Breathing Zone OA Vbz (cfm)	Zone Air Dist Eff Ez	Zone OA Voz (cfm)	Zone Supply Air Vpz (cfm)	OA Fraction Zp	Zone Vent Efficiency Evz
Deli Prep	859	0.06	52	5	5	7.5	38	89	0.8	111	2600	0.043	0.991
TOTAL	859		52		5		38	89		111	2600	0.043	0.991

Occupant Diversity	D	1.00	
Uncorrected OA	Vou	89	D x ∑ all zones RpPz + ∑ all zones AzRa
Average OA Fraction	Xs	0.034	Per ASHRAE 62.1-2012 Appendix A
Ventilation Efficiency	Ev	0.99	From 62.1-2012 Appendix A equation A-3, or 1.00 from Table 403.3.2.3.2
Ventilation Eff. Used	Ev	1.00	Select the largest of the two Ev values above

TOTAL REQUIRED OA	Vot	89	cfm
TOTAL OA PROVIDED		500	cfm

Zone Description	one Are (sq.ft.)	Exhaust Rate cfm/sq.ft.	Min Exhaust (cfm)	Min. Exhaust Provided (cfm)
Deli Prep	859	0.7	601	3580

AC-6 Receiving/Storage

Zone Description	Zone Area Az (sq.ft.)	Area OA Rate Ra cfm/sq.ft.	Area OA Az x Ra (cfm)	Occupant Load Rate (ppl/1000 sf)	Occupant Load Pz (people)	Occupant OA Rate Rp (cfm/pers)	Occupant OA Rp x Pz (cfm)	Breathing Zone OA Vbz (cfm)	Zone Air Dist Eff Ez	Zone OA Voz (cfm)	Zone Supply Air Vpz (cfm)	OA Fraction Zp	Zone Vent Efficiency Evz
Receiving/Storage	3162	0.12	379	0	0	0	0	379	0.8	474	1800	0.264	0.865
Corridor	233	0.12	28	1	1	1	1	29	1.8	16	300	0.161	0.987
Employee Restrooms	119	0	0	0	0	0	0	0	0.8	0	100	0.000	1.148
Electrical Room	239	0	0	0	0	0	0	0	0.8	0	500	0.000	1.148
Dept. Office	112	0.06	7	5	1	5	5	12	0.8	15	200	[illegible]	1.075
Lounge	144	0.06	15	5	2	5	10	25	0.8	31	300	0.103	[illegible]
TOTAL	4109		429		4		16	445		536	[illegible]	0.264	[illegible]

Occupant Diversity	D	1.00	
Uncorrected OA	Vou	445	D x ∑ all zones RpPz + ∑ all zones AzRa
Average OA Fraction	Xs	0.148	Per ASHRAE 62.1-2012 Appendix A
Ventilation Efficiency	Ev	0.88	From 62.1-2012 Appendix A equation A-3, or 0.89 from Table 403.3.2.3.2
Ventilation Eff. Used	Ev	0.89	Select the largest of the two Ev values above

TOTAL REQUIRED OA	Vot	500	cfm
TOTAL OA PROVIDED		500	cfm

CONTRACTOR FURNISHED/CONTRACTOR INSTALLED

VARIABLE VOLUME BOX SCHEDULE

UNIT	METALAIRE BP600	CFM	MIN. CFM	NOM. STATIC PRESSURE	LOCATION
[illegible]	[illegible]	200	70	0.02 in-wg	STORE MGR OFFICE
V-2	BP60[illegible]	200	70	0.02 in-wg	CASH ROOM
V-3	[illegible]608	200	85	0.02 in-wg	TRAINING
V-4	BP610	400	200	0.02 in-wg	GENERAL OFFICE
[illegible]	BP610	300	180	0.02 in-wg	LOUNGE
V-6	BP608	200	80	0.02 in-wg	DEPT. OFFICE

NOTES:

1) SUPPLY ALL UNITS WITH 24V ACTUATORS, POWER IS FROM THE EMS.
2) BOXED SUPPLIED AND INSTALLED BY THE MECHANICAL CONTRACTOR.
3) BOXES SHALL BE MOUNTED WITHIN 2 FEET OF THE CEILING.
4) ALL VAV MOTORS SHALL BE EQUIPPED WITH THE KMC MODEL MEP-5063 18 DEG/MIN ACTUATOR.

SHOULD THE MECHANICAL CONTRACTOR DEVIATE FROM PUBLIX PLANS; THEY SHALL BE RESPONSIBLE TO ENSURE THE DUCTWORK WILL SUPPORT EQUIPMENT INSTALLED AND THE DUCTWORK SHOP DRAWINGS ARE COORDINATED WITH THE SELECTED EQUIPMENT.

RADIANT/SPACE HEATER SCHEDULE

CONTRACTOR FURNISHED / CONTRACTOR INSTALLED

MARK	MANUFACTURER	MODEL	ELECTRICAL OUTPUT	STEPS/#	VOLTAGE	AMPS	TOTAL HEATING CAPACITY	NOTES
RH-1	INTEK	Z1248.208.5000	5000 W	1 ELEMENT	208/1/60	[illegible] A	17061 Btu/h	1-7

NOTES:

1) HEATERS SUPPLIED AND INSTALLED BY MECHANICAL CONTRACTOR.
2) WIRING DISCONNECT (IF APPLICABLE) AND FINAL TERMINATION TO HEATER PROVIDED AND INSTALLED BY ELECTRICAL CONTRACTOR.
3) MOUNT HEATER SUSPENDED FROM BAR JOISTS.
4) THERMOSTAT PROVIDED BY PUBLIX, INSTALLED BY ELECTRICAL CONTRACTOR.
5) INTERLOCK OWNER PROVIDED THERMOSTAT WITH EMS. THAT HEATER SHALL ACTIVATE WHENEVER THE OA TEMP. IS BELOW 50°F AND THE ROOM TEMP. IS BELOW 50°F, DURING THE OCCUPIED MODE. THE EMS WILL SECURE THE RADIANT HEATER WITH OA TEMP. GREATER THAN 52°F AND ROOM TEMP. ABOVE [illegible] OR A RISE IN ROOM TEMP. ABOVE 55°F.
6) HEATER SHALL BE MOUNTED SUCH THAT HEAT PROJECTED FROM THE FACE WILL NOT RADIATE ANY COMBUSTIBLE SURFACE LESS THAN THE MINIMUM SAFE DISTANCE OF 48". HEATER SHALL BE MOUNTED AT MINIMUM OF 6" FROM ANY WALL. SIDES SHALL BE MIN. 12" FROM ANY SURFACE. MINIMUM MOUNTING HEIGHT IS 10 FT. AFF.
7) DISCONNECT SWITCH BY ELECTRICAL CONTRACTOR.

AC HEATING SCHEDULE

MARK	HEATING TYPE	GAS HEAT (INPUT BTU/OUTPUT BTU/STAGES)	EAT	LAT	MCA	MOCP	POWER (V/PH/HZ)
AC-1	NAT. GAS	700000 / 560000 / MOD.	49.0 °F	88.9 °F	205 A	250 A	208 / 3 / 60
AC-2	NAT. GAS	65000 / 52000 / 1	59.4 °F	86.1 °F	33 A	45 A	208 / 3 / 60
AC-3	NAT. GAS	65000 / 52000 / 1	58.0 °F	82.1 °F	33 A	45 A	208 / 3 / 60
AC-4	NAT. GAS	65000 / 52000 / 1	60.1 °F	80.2 °F	32 A	45 A	208 / 3 / 60
AC-5	NAT. GAS	130,000 / 104,000 / 2	58.4 °F	95.4 °F	39 A	45 A	208 / 3 / 60
AC-6	NAT. GAS	130,000 / 104,000 / 2	59.3 °F	91.4 °F	38 A	45 A	208 / 3 / 60

NOTES:

NATURAL GAS HEATING SHOWN FOR STORES OUTSIDE OF FLORIDA IS BASED ON AN O.A. TEMPERATURE OF 11°F.

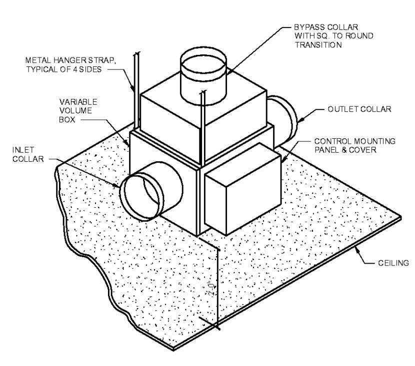

1/M3.1 HVAC-VARIABLE VOLUME BOX DETAIL
NTS

AIR CONDITIONING LEGEND

GR	GRILLE
DG	DOOR GRILLE – OPENING CUT BY G.C.
CG	CEILING GRILLE
REG	REGISTER
CR	CEILING REGISTER
CD	CEILING DIFFUSER
OA	OUTSIDE AIR
RA	RETURN AIR
SA	SUPPLY AIR
CFM	CUBIC FEET PER MINUTE
FPM	FEET PER MINUTE
SD	SPLITTER DAMPER
OBD	OPPOSED BLADE DAMPER
RO	RAKE OFF – TITUS MODEL AG-45
RD	RADIATION DAMPER – UL LISTED
FD	FIREDAMPER – UL LISTED 1 1/2 HOUR
VD	VOLUME DAMPER
RH	RADIANT HEATER
SH	SPACE HEATER
DH	DUCT HEATER
UON	UNLESS OTHERWISE NOTED
(symbol)	SMOKE DETECTOR

AREAS OF HORIZONTAL RUNS

ELECTRICAL: TOP OF STEEL GIRDER AND JOIST TO 32 IN. BELOW TOP OF STEEL; WHERE EXPOSED IN PROTOTYPE, IMMEDIATELY BENEATH TOP OF JOIST MEMBER AND PASSING BETWEEN STEEL JOIST WEBBING. THE INSTALLATION SHALL BE IN COMPLIANCE WITH NEC 300.4(E)

REFRIGERATION: 32 IN. TO 36 IN. BELOW ROOF DECK; EXPOSED IN PROTOTYPE, IMMEDIATELY BELOW BOTTOM CHORD OF STEEL JOIST GIRDERS AND JOISTS.

FIRE SPRINKLER: 8 IN. ABOVE CEILING; WHERE EXPOSED IN PROTOTYPE, 8 IN. ABOVE BOTTOM CHORD OF STEEL GIRDER JOISTS AND JOISTS.

AIR CONDITIONING: 36 IN. BELOW ROOF DECK TO 10 IN. ABOVE CEILING; WHERE EXPOSED IN PROTOTYPE, HANG AS CLOSE UNDER BOTTOM CHORD OF STEEL JOIST GIRDERS AND JOISTS AS POSSIBLE WHILE LEAVING ROOM FOR REFRIGERATION LINES.

IF DEVIATION FROM THESE AREAS IS INDICATED, SUCH DEVIATION MUST BE AGREED UPON BY JOB SUPERINTENDENT AND PUBLIX REPRESENTATIVE.

AIR CONDITIONING NOTES

1) WORK THIS DRAWING WITH DRAWINGS M-1 THROUGH M-5.
2) COORDINATE DIMENSIONS WITH GENERAL CONTRACTOR FOR LOCATION OF EQUIPMENT, OPENINGS, CONCRETE BASES, ETC.
3) COORDINATE HANGING OF OUTLETS AND EQUIPMENT WITH ACOUSTICAL TILE ELECTRICAL, FIRE PROTECTION, AND PLUMBING CONTRACTORS.
4) DUCT SIZES INDICATED ARE FOR FREE AREA, ELBOWS SHALL BE A MINUM OF 1.0 CENTER LINE RADIUS. SEAL ALL JOINTS AND SEAMS AS INDICATED ON THE DETAILS.
5) CEILING DIFFUSERS, REGISTERS, GRILLES, ETC. ARE BASED ON METALAIRE MODELS OR AS INDICATED – SEE SCHEDULE.
6) ALL DUCT WORK IS SINGLE WALL GALVANIZED SHEET METAL EXCEPT WHERE INDICATED.
7) ALL CONCEALED DUCT WORK IS INSULATED AS FOLLOWS DUCT INSULATION 1.0" LB. DENSITY, R-6.06 AT A THICKNESS OF:
   a) Supply Air (S/A): 2"
   b) Return Air (R/A): 2"
8) A/C SUPPLIER SHALL CHANGE ALL FILTERS EACH 60 DAYS FOR THE FIRST YEAR'S OPERATION.
9) SMOKE DETECTORS SHALL BE FIRELITE D355PL. DETECTORS SHALL BE MOUNTED IN THE SUPPLY AND RETURN DUCTS WITH THE SENSING PROBES EXTENDING THE LENGTH OF THE LONGEST DUCT DIMENSION. THE MECHANICAL CONTRACTOR SHALL COORDINATE WITH THE FIRE ALARM CONTRACTOR THE REQUIRED NUMBER OF SMOKE DETECTORS AND THE LENGTH OF THE SAMPLING TUBES FOR EACH DETECTOR. DETECTORS IN THE RETURN AIR STREAM SHALL BE MOUNTED PRIOR TO MIXING WITH OUTSIDE AIR. SEE DRAWING E-7 FOR LOCATIONS OF REMOTE TEST BUTTONS. DETECTOR SHALL BE:
   a) SUPPLIED BY FIRE ALARM CONTRACTOR
   b) INSTALLED BY MECHANICAL CONTRACTOR
   c) WIRED BY FIRE ALARM CONTRACTOR
   d) POWERED BY FIRE ALARM CONTROL PANEL
10) HURRICANE BRACKETS FOR A/C EQUIPMENT ARE PROVIDED WITH THE CURBS MANUFACTURED BY AES INDUSTRIES INC AND INSTALLED BY THE CONTRACTOR.
11) ROOFTOP EQUIPMENT SHALL MEET THE LOCAL BUILDING CODE WIND REQUIREMENTS. SEE STRUCTURAL SHEETS FOR FURTHER INFORMATION. DESIGN CRITERIA FOR THIS PROJECT IS:
   a) MAX WIND SPEED: 115 MPH
   b) EXPOSURE CATEGORY: C
12) SEISMIC BRACING: (WHERE REQUIRED) ALL HVAC DUCTWORK SHALL BE PROVIDED WITH SEISMIC RESTRAINTS IN ACCORDANCE WITH SEISMIC HAZARD LEVEL "SHL-C" OF THE ANSI/SMACNA SEISMIC RESTRAINT MANUAL: GUIDELINES FOR MECHANICAL SYSTEMS AS PUBLISHED BY THE SHEET METAL AND AIR CONDITIONING CONTRACTORS NATIONAL ASSOCIATION, INC. AND IN ACCORDANCE WITH LOCAL CODES.
13) SEISMIC DESIGN CRITERIA FOR ALL HVAC EQUIPMENT AND SUPPORT SYSTEMS SHALL MEET THE FOLLOWING REQUIREMENTS:
   a) SEISMIC DESIGN CATEGORY "C"
   b) IBC, CH. 16 SEISMIC REQUIREMENTS FOR ARCHITECTURAL, MECHANICAL, AND ELECTRICAL COMPONENTS
   c) ASCE/SEI 7-05 MINIMUM DESIGN LOADS FOR BUILDINGS AND OTHER STRUCTURES.
14) THE MECHANICAL CONTRACTOR SHALL SUBMIT AT A MINIMUM (3) SETS OF SIGNED AND SEALED PUBLIX HVAC CONTRACT DRAWINGS ([illegible] SHEETS) AND [illegible] SETS OF AN APPROVED CAPTIVEAIRE GREASE HOOD CONSTRUCTION/ANSUL FIRE PROTECTION SHOP DRAWINGS TO THE AUTHORITY HAVING JURISDICTION FOR PERMITTING UNDER A SEPARATE PERMIT AT THE APPROPRIATE TIME.
15) THE GENERAL CONTRACTOR SHALL ENSURE ALL HVAC SYSTEM COMPONENTS ARE OPERATIONAL WITH ALL AIR DISTRIBUTION SYSTEM VOLUME DAMPERS SET IN THE FULL OPEN POSITION PRIOR TO INITIATING TEST AND BALANCE AS PER PUBLIX'S NEW STORE PRE-CONSTRUCTION JOB MANUAL.

HVAC LOAD CALCULATIONS

AC-1 MAIN SALES

ZONE LOADS	Details	COOLING Sensible (BTU/hr)	COOLING Latent (BTU/hr)	HEATING Sensible (BTU/hr)
Outdoors		81.2°F db/76.2°F wb		11°F
Indoors		74 F, 52 F DP		70°F
Window & Skylight Solar Loads	0 ft²	0	-	-
Wall Transmission	1509 ft²	892	-	5383
Roof Transmission	22621 ft²	29512	-	60185
Window Transmission	0 ft²	0	-	0
Skylight Transmission	0 ft²	0	-	-
Door Loads	21 ft²	26	-	[illegible]
Floor Transmission	22621 ft²	0	-	[illegible]
Partitions	0 ft²	0	-	-
Ceiling	0 ft²	0	-	0
Overhead Lighting	26974 W	63528	-	0
Task Lighting	0 W	-	-	0
Electric Equipment	11740 W	[illegible]	-	0
People	184	36048	37980	0
Infiltration	-	0	0	0
Miscellaneous	-	13874	0	0
Safety Factor	[illegible]% / 0%	0	0	0
>> Total Zone Loads	-	200829	[illegible]	71611
Zone Conditioning	-	149790	[illegible]	[illegible]
Plenum Wall Load	0%	0	-	0
Plenum Roof Load	0%	0	-	0
Plenum Lighting Load	0%	0	-	0
Return Fan Load	13000 CFM	0	-	0
Ventilation Load	[illegible] CFM	28151	221780	272236
Supply Fan Load	[illegible] CFM	19274	-	-19274
Space Fan Coil Fans	-	0	-	0
Duct Heat Gain / Loss	[illegible]%	1986	-	3483
>> Total System Loads	-	199171	259760	320436
Central Cooling Coil	-	413272	259760	0
Central Heating Coil	-	-214101	-	320436
>> Total Conditioning	-	199171	259760	320436
Refrigerated case effects		-103020	-37980	103020
Total Zone Conditioning		46770	0	167001
System level loads		263482	221780	256455
Total System Loads		310252	221780	423456

Total Cooling Required	44.3 Tons
Total Heating Required	423 MBH

AC-2 VESTIBULES

ZONE LOADS	Details	COOLING Sensible (BTU/hr)	COOLING Latent (BTU/hr)	HEATING Sensible (BTU/hr)
Outdoors		93.1°F db/74.4°F wb		11.0°F
Indoors		75 F, 50% RH		70 F
Window & Skylight Solar Loads	[illegible]	798	-	-
Wall Transmission	[illegible]	1562	-	4793
Roof Transmission	203[illegible]	[illegible]	-	5407
Window Transmission	24 ft²	126	-	497
Skylight Transmission	0 ft²	0	-	0
Door Loads	184 ft²	3386	-	6542
Floor Transmission	[illegible] ft²	0	-	2858
Partitions	0 ft²	0	-	0
Ceiling	0 ft²	0	-	0
Overhead Lighting	2258 W	6454	-	0
Task Lighting	0 W	0	-	0
Electric Equipment	0 W	0	-	0
People	7	1367	1435	0
Infiltration	-	2122	2513	6917
Miscellaneous	-	0	0	0
Safety Factor	0% / 0%	0	0	0
>> Total Zone Loads	-	19515	3948	27014
Zone Conditioning	-	22489	3948	26391
Plenum Wall Load	0%	0	-	0
Plenum Roof Load	0%	0	-	0
Plenum Lighting Load	0%	0	-	0
Return Fan Load	1800 CFM	0	-	0
Ventilation Load	300 CFM	5431	6688	18141
Supply Fan Load	1800 CFM	1334	-	-1334
Space Fan Coil Fans	-	0	-	0
Duct Heat Gain / Loss	2%	390	-	540
>> Total System Loads	-	29644	10636	43738
Central Cooling Coil	-	41477	10636	0
Central Heating Coil	-	-11833	-	43738
>> Total Conditioning	-	29644	10636	43739
Refrigerated case effects		0	0	0
Total Zone Conditioning		22489	3948	26391
System level loads		18988	6688	17347
Total System Loads		41477	10636	43738

Total Cooling Required	4.3 Tons
Total Heating Required	43.7 MBH

AC-3 PHARMACY/OFFICES

ZONE LOADS	Details	COOLING Sensible (BTU/hr)	COOLING Latent (BTU/hr)	HEATING Sensible (BTU/hr)
Outdoors		93.1°F db/74.4°F wb		11.0°F
Indoors		75 F, 50% RH		70 F
Window & Skylight Solar Loads	0 ft²	0	-	-
Wall Transmission	1535 ft²	1548	-	4627
Roof Transmission	1816 ft²	3033	-	4830
Window Transmission	0 ft²	0	-	0
Skylight Transmission	0 ft²	0	-	0
Door Loads	0 ft²	0	-	0
Floor Transmission	1816 ft²	0	-	3332
Partitions	0 ft²	0	-	0
Ceiling	0 ft²	0	-	0
Overhead Lighting	1816 W	4962	-	0
Task Lighting	0 W	0	-	0
Electric Equipment	4022 W	12504	-	0
People	23	4334	4715	0
Infiltration	-	0	0	0
Miscellaneous	-	0	0	0
Safety Factor	0% / 0%	0	0	0
>> Total Zone Loads	-	26081	4715	12789
Zone Conditioning	-	31128	4715	12436
Plenum Wall Load	0%	0	-	0
Plenum Roof Load	0%	0	-	0
Plenum Lighting Load	0%	0	-	0
Return Fan Load	2000 CFM	0	-	0
Ventilation Load	400 CFM	5657	6999	24451
Supply Fan Load	2000 CFM	1853	-	-1853
Space Fan Coil Fans	-	0	-	0
Duct Heat Gain / Loss	2%	622	-	256
>> Total System Loads	-	39360	11714	35290
Central Cooling Coil	-	39360	11716	-
Central Heating Coil	-	0	-	35290
>> Total Conditioning	-	39360	11716	35290
Refrigerated case effects		0	0	0
Total Zone Conditioning		31128	4715	12436
System level loads		8232	6999	22854
Total System Loads		39360	11714	35290

Total Cooling Required	4.3 Tons
Total Heating Required	35.3 MBH

AC-4 BAKERY

ZONE LOADS	Details	COOLING Sensible (BTU/hr)	COOLING Latent (BTU/hr)	HEATING Sensible (BTU/hr)
Outdoors		93.1°F db/74.4°F wb		11.0°F
Indoors		75 F, 50% RH		70 F
Window & Skylight Solar Loads	0 ft²	0	-	-
Wall Transmission	771 ft²	775	-	2557
Roof Transmission	2260 ft²	4191	-	6011
Window Transmission	0 ft²	0	-	0
Skylight Transmission	0 ft²	0	-	0
Door Loads	0 ft²	0	-	0
Floor Transmission	2260 ft²	0	-	1884
Partitions	0 ft²	0	-	0
Ceiling	0 ft²	0	-	0
Overhead Lighting	2260 W	6371	-	0
Task Lighting	0 W	0	-	0
Electric Equipment	2260 W	7113	-	0
People	8	1754	2160	0
Infiltration	-	0	0	0
Miscellaneous	-	22581	11115	0
Safety Factor	0% / 0%	0	0	0
>> Total Zone Loads	-	42785	13275	10452
Zone Conditioning	-	46288	13275	6883
Plenum Wall Load	0%	0	-	0
Plenum Roof Load	0%	0	-	0
Plenum Lighting Load	0%	0	-	0
Return Fan Load	2400 CFM	0	-	0
Ventilation Load	400 CFM	6884	6644	24542
Supply Fan Load	2400 CFM	1778	-	-1778
Space Fan Coil Fans	-	0	-	0
Duct Heat Gain / Loss	2%	775	-	205
>> Total System Loads	-	55710	19918	29855
Central Cooling Coil	-	55710	19921	-
Central Heating Coil	-	0	-	29855
>> Total Conditioning	-	55710	19921	29855
Refrigerated case effects		-3850	-1650	3850
Total Zone Conditioning		42438	11625	10733
System level loads		9422	6644	22972
Total System Loads		51860	18269	33785

Total Cooling Required	5.9 Tons
Total Heating Required	33.7 MBH

AC-5 DELI

ZONE LOADS	Details	COOLING Sensible (BTU/hr)	COOLING Latent (BTU/hr)	HEATING Sensible (BTU/hr)
Outdoors		93.1°F db/74.4°F wb		11.0°F
Indoors		75 F, 50% RH		70 F
Window & Skylight Solar Loads	0 ft²	0	-	-
Wall Transmission	0 ft²	0	-	0
Roof Transmission	2539 ft²	4708	-	6753
Window Transmission	0 ft²	0	-	0
Skylight Transmission	0 ft²	0	-	0
Door Loads	0 ft²	0	-	0
Floor Transmission	2539 ft²	0	-	0
Partitions	0 ft²	0	-	0
Ceiling	0 ft²	0	-	0
Overhead Lighting	2539 W	7157	-	0
Task Lighting	0 W	0	-	0
Electric Equipment	2539 W	7991	-	0
People	18	3232	3670	0
Infiltration	-	0	0	0
Miscellaneous	-	21836	0	0
Safety Factor	0% / 0%	0	0	0
>> Total Zone Loads	-	44925	3670	6753
Zone Conditioning	-	49010	3670	8107
Plenum Wall Load	0%	0	-	0
Plenum Roof Load	0%	0	-	0
Plenum Lighting Load	0%	0	-	0
Return Fan Load	2600 CFM	0	-	0
Ventilation Load	500 CFM	6614	11092	30536
Supply Fan Load	2600 CFM	1927	-	-1927
Space Fan Coil Fans	-	0	-	0
Duct Heat Gain / Loss	2%	699	-	135
>> Total System Loads	-	60350	14763	34851
Central Cooling Coil	-	60350	14763	-
Central Heating Coil	-	0	-	34850
>> Total Conditioning	-	60350	14763	34850
Refrigerated case effects		0	0	0
Total Zone Conditioning		49010	3670	6107
System level loads		11340	11093	28744
Total System Loads		60350	14763	34851

Total Cooling Required	6.3 Tons
Total Heating Required	34.9 MBH

AC-6 RECEIVING/STORAGE

ZONE LOADS	Details	COOLING Sensible (BTU/hr)	COOLING Latent (BTU/hr)	HEATING Sensible (BTU/hr)
Outdoors		93.1°F db/74.4°F wb		11.0°F
Indoors		75 F, 50% RH		70 F
Window & Skylight Solar Loads	0 ft²	0	-	-
Wall Transmission	2214 ft²	4649	-	20037
Roof Transmission	4797 ft²	6526	-	12759
Window Transmission	0 ft²	0	-	0
Skylight Transmission	0 ft²	0	-	0
Door Loads	288 ft²	568	-	2235
Floor Transmission	4797 ft²	0	-	4886
Partitions	0 ft²	0	-	0
Ceiling	0 ft²	0	-	0
Overhead Lighting	4797 W	14752	-	0
Task Lighting	0 W	0	-	0
Electric Equipment	5995 W	18793	-	0
People	17	3543	4005	0
Infiltration	-	4661	6207	15194
Miscellaneous	-	0	0	0
Safety Factor	0% / 0%	0	0	0
>> Total Zone Loads	-	55292	10212	55111
Zone Conditioning	-	57342	10212	54097
Plenum Wall Load	0%	0	-	0
Plenum Roof Load	0%	0	-	0
Plenum Lighting Load	0%	0	-	0
Return Fan Load	3000 CFM	0	-	0
Ventilation Load	500 CFM	8732	12537	30127
Supply Fan Load	3000 CFM	2780	-	-2780
Space Fan Coil Fans	-	0	-	0
Duct Heat Gain / Loss	2%	985	-	1227
>> Total System Loads	-	69839	22749	82671
Central Cooling Coil	-	82740	22750	-
Central Heating Coil	-	-12900	-	82671
>> Total Conditioning	-	69840	22750	82671
Refrigerated case effects		-6230	-2670	6230
Total Zone Conditioning		51112	7542	60327
System level loads		25397	12537	28574
Total System Loads		76509	20879	88901

Total Cooling Required	8.8 Tons
Total Heating Required	88.9 MBH

GRAVITY INTAKE HOOD SCHEDULE

ID	Mfr	Model	Type	CFM	SP	Throat Size	Overall Size	Wt(lbs)	Serves	Notes
GIH-1	Greenheck	FGI	Intake	4500	0.047"	30"x36"	60" x 54" x 19"h	157	AC-1	1,2
GIH-2	Greenheck	FGI	Intake	3550	0.03"	30" x 36"	60" x 54" x 19"h	157	Refr. Motor Room	1,2,3

CONTRACTOR FURNISHED/CONTRACTOR INSTALLED

Notes

1. Provide hood with 5" high base and birdscreen.
2. Mount hood level on roof on manufacturer's insulated 12" high curb.
3. Provide and install n/c's 120 V motorized dampers in hood. Damper shall fully open when either of the motor room exhaust fans are energized and fully close when fans are de-energized.

DWYER ENGINEERING
552 Fort Evans Rd, Suite 200
Leesburg, VA 20176
www.dwyer.com
GA COA #PEF004622
EXPIRES 06/30/2022
PHONE 703-777-5988
EMAIL publix@dwyer.com

THIS DRAWING AND ALL INFORMATION CONTAINED HEREIN IS THE EXCLUSIVE PROPERTY OF FISHER AND ASSOCIATES, AND IS NOT TO BE COPIED OR USED IN ANY WAY WITHOUT THE EXPRESS WRITTEN CONSENT OF FISHER AND ASSOCIATES, LLC. AND MUST BE RETURNED UPON REQUEST. THIS DRAWING IS NOT FOR GENERAL USE OR PUBLICATION. ALL RIGHTS RESERVED.

TO THE BEST OF MY KNOWLEDGE, THE SPECIFICATIONS AND PLANS SHOWN HEREIN COMPLY WITH THE APPLICABLE MINIMUM BUILDING CODES IN EFFECT AT THIS TIME.

PUBLIX PROTOTYPE BASIS OF DESIGN
20M
EXPANDED
RECEIVED: 09.14.18

CORPORATE OFFICES, FACILITIES DESIGN
BOX 407, LAKELAND, FL. 33802
(863) 680-5295
PHYSICAL ADDRESS:
3300 AIRPORT RD., LAKELAND, FL. 33811

Publix SUPER MARKETS

FISHER AND ASSOCIATES, LLC.
ARCHITECTS
PLANNERS
INTERIOR DESIGNERS
AA26000738
2315 BELLEAIR RD. CLEARWATER, FL 33764 727.443.4436

HVAC SCHEDULES AND DETAILS
EAST COBB PUBLIX - #1745
EAST COBB CROSSING SHOPPING CENTER
ROSEWELL ROAD
MARIETTA, GA 30062

RELEASED FOR:	
BID	
PERMIT	07/16/20
CONSTR.	

REVISIONS:

This item has been digitally signed and sealed on date shown using Bluebeam and secure GlobalSign USB key.

GEORGIA REGISTERED PROFESSIONAL ENGINEER JUSTIN T LITZ
07/16/2020

M-3

©COPYRIGHT 2020

Issue Date: 04-01-20
Project No.: 220006

Order Plans @ www.LDILine.com