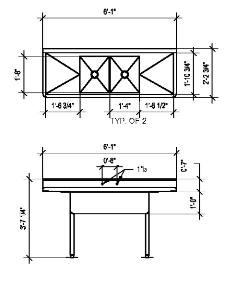

- T & S BRASS MODEL B-2832-40 MIXING FAUCET BODY & B-156 ADF W/ 12" SPOUT
- FISHER ROTARY HANDLE WASTE DRAIN #65676 INC. STRAINER

1 DELI & PRODUCE PREP SINKS
P-6 SCALE: 3/8" = 1'-0"

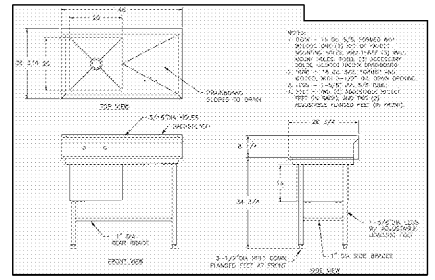

2 1 COMP. SINKS
P-6 SCALE: 3/8" = 1'-0"

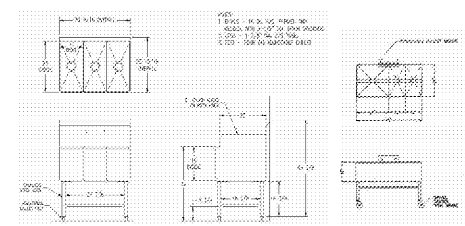

3 3 COMP. MOBILE SINKS
P-6 SCALE: 3/8" = 1'-0"

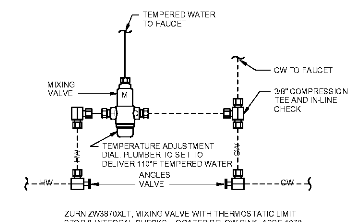

ZURN ZW3870XLT, MIXING VALVE WITH THERMOSTATIC LIMIT STOP & INTEGRAL CHECKS, LOCATED BELOW SINK. ASSE 1070 LISTED.

4 THERMOSTATIC MIXING VALVE DETAIL
P-6 SCALE: N.T.S.

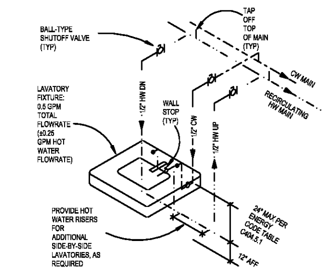

*NOTE: ONLY REQUIRED AT PUBLIC LAVATORIES

5 PARALLEL HOT WATER LOOP DETAIL
P-6 SCALE: N.T.S.

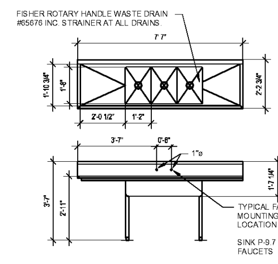

PRODUCE PREP 3CS SINK

T&S BRASS MODEL B-2832-40 MIXING FAUCET BODY & B-156 ADF W/12" SPOUT

DELI/BAKERY PREP 3CS SINK

T&S BRASS MODEL B-2832-40 MIXING FAUCET BODY & B-156 ADF W/12" SPOUT

MEAT PREP 3CS SINK

T & S BRASS MODEL B-2832-40 MIXING FAUCET BODY & B-156 ADF W/ 12" SPOUT

FISHER ROTARY HANDLE WASTE DRAIN #65676 INC. STRAINER

6 3 COMPARTMENT SINK
P-6 SCALE: 3/8" = 1'-0"

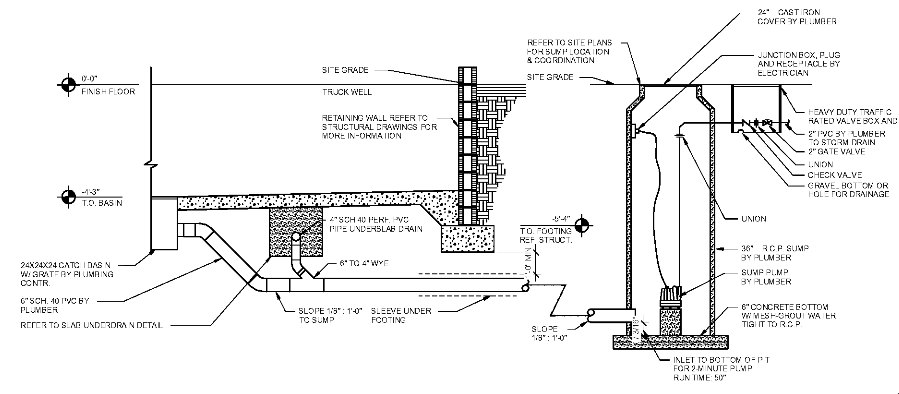

7 SUMP PUMP DETAIL
P-6 SCALE: 3/8" = 1'-0"

SEE DETAIL ON CIVIL SHEET C-5.2

8 GREASE INTERCEPTOR DETAIL
P-6 SCALE: N.T.S.

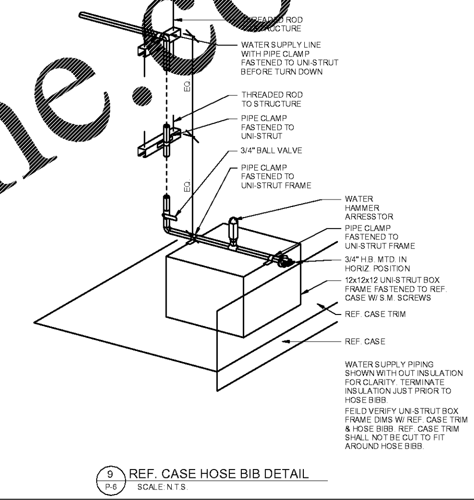

WATER SUPPLY PIPING SHOWN WITH OUT INSULATION FOR CLARITY. TERMINATE INSULATION JUST PRIOR TO HOSE BIBB.

FEILD VERIFY UNI-STRUT BOX FRAME DIMS W/ REF. CASE TRIM & HOSE BIBB. REF. CASE TRIM SHALL NOT BE CUT TO FIT AROUND HOSE BIBB.

9 REF. CASE HOSE BIB DETAIL
P-6 SCALE: N.T.S.

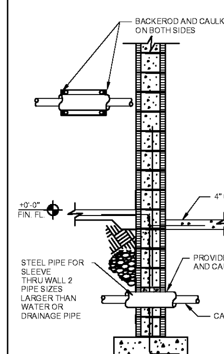

10 SLEEVE THRU WALL
P-6 SCALE: N.T.S.

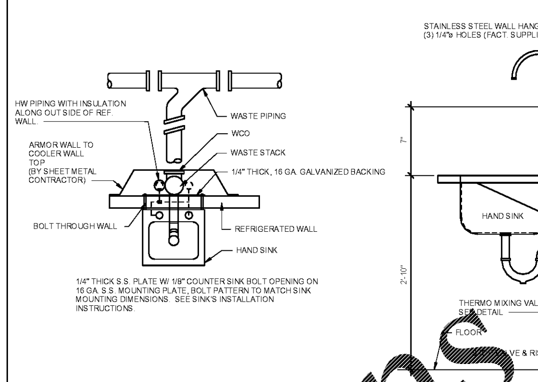

11 SINK PIPING EXPOSED AT COOLER WALL
P-6 SCALE: N.T.S.

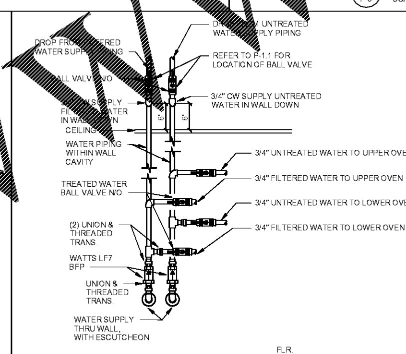

NOTES:

1. REFER TO MANUFACTURER'S RECCOMMENDATIONS FOR APPLIANCE CONNECTORS.

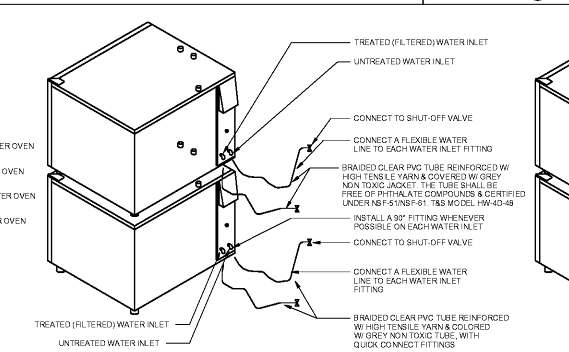

WATER SUPPLY INSTALLATION DETAIL
N.T.S.

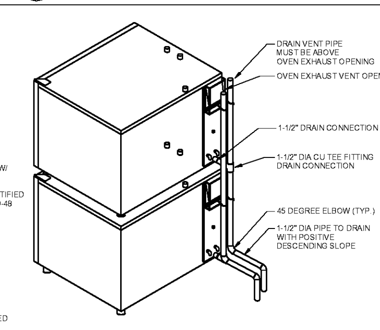

NOTES:

1. INSTALLATION KITS HAVE A MAXIMUM RUN LENGTH OF 4-1/2" FT.
2. DRAIN MATERIALS MUST WITHSTAND TEMPERATURES UP TO 200°F.
3. USE ONLY GLUE DESIGNED FOR COPPER.

DRAINAGE INSTALLATION DETAIL
N.T.S

12 COMBI-THERM STACKED OVENS
P-6 SCALE: N.T.S.

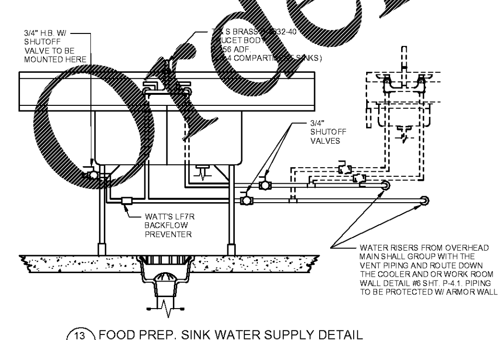

13 FOOD PREP. SINK WATER SUPPLY DETAIL
P-6 SCALE: N.T.S.

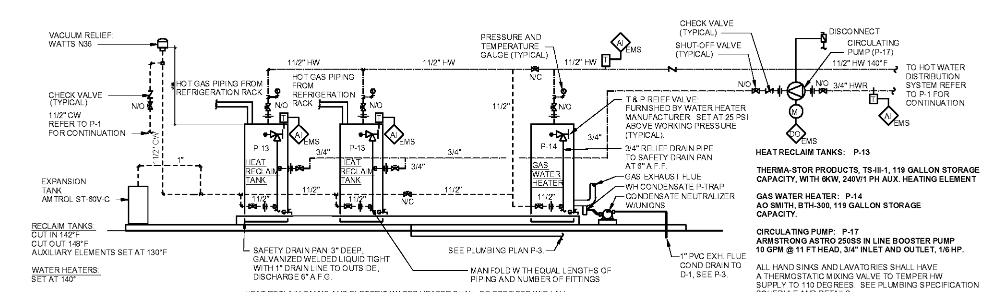

RECLAIM TANKS:
CUT IN 142°F
CUT OUT 148°F
AUXILIARY ELEMENTS SET AT 130°F

WATER HEATERS:
SET AT 140°

CIRCULATING PUMP:
SET AT 140°F
SCHEDULE TO RUN FROM 4:00A.M. TO 12:00A.M.

HEAT RECLAIM TANKS AND ELECTRIC WATER HEATER SHALL BE PREPIPED WITH ALL ACCESSORIES BY HILL-PHOENIX

HEAT RECLAIM TANKS: P-13

THERMA-STOR PRODUCTS, TS-III-1, 119 GALLON STORAGE CAPACITY, WITH 6KW, 240V/1 PH AUX. HEATING ELEMENT

GAS WATER HEATER: P-14
AO SMITH, BTH-300, 119 GALLON STORAGE CAPACITY.

CIRCULATING PUMP: P-17
ARMSTRONG ASTRO 250SS IN LINE BOOSTER PUMP 10 GPM @ 11 FT HEAD, 3/4" INLET AND OUTLET, 1/6 HP.

ALL HAND SINKS AND LAVATORIES SHALL HAVE A THERMOSTATIC MIXING VALVE TO TEMPER HW SUPPLY TO 110 DEGREES. SEE PLUMBING SPECIFICATION SCHEDULE AND DETAILS.

NOTES:
AI - ANALOG INPUT
DO - DIGITAL OUTPUT
M - MOTOR
T - TEMPERATURE

14 GAS WATER HEATER/HEAT RECLAIM PIPING
P-6 SCALE: N.T.S.

NOTES:

1. APPLICABLE CODES MUST BE FOLLOWED WITH INSTALLATION.
2. MOUNT TEMPERING KIT PLUMBING ASSEMBLY TO WALL BEHIND PANWASHER. ASSEMBLY CAN BE MOUNTED EITHER VERTICAL OR HORIZONTAL.

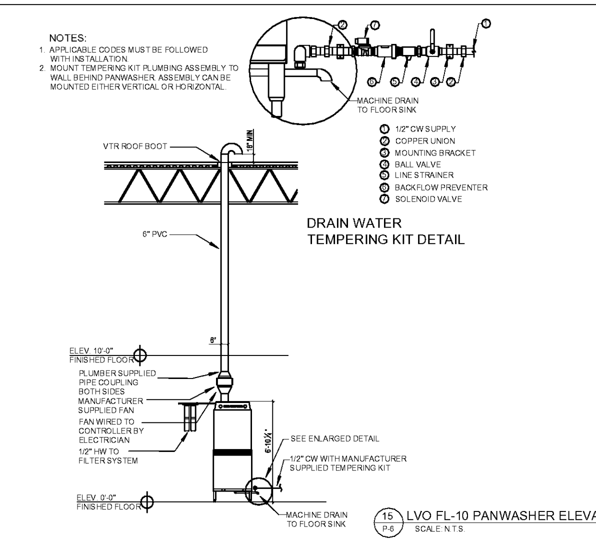

DRAIN WATER TEMPERING KIT DETAIL

15 LVO FL-10 PANWASHER ELEVATION
P-6 SCALE: N.T.S.

This document has been electronically signed and sealed on date shown using Bluebeam and secure GlobalSign USB key.

07/16/2020

DWYER ENGINEERING
552 Fort Evans Rd, Suite 200
Leesburg, VA 20176
www.dwyer.com
GA COA #PEF004622
EXPIRES 06/30/2022
PHONE 703-777-5988
EMAIL publix@dwyer.com

THIS DRAWING AND ALL INFORMATION CONTAINED HEREIN IS THE EXCLUSIVE PROPERTY OF FISHER AND ASSOCIATES, AND IS NOT TO BE COPIED OR USED IN ANY WAY WITHOUT THE EXPRESS WRITTEN CONSENT OF FISHER AND ASSOCIATES, LLC. AND MUST BE RETURNED UPON REQUEST. THIS DRAWING IS NOT FOR GENERAL USE OR PUBLICATION, ALL RIGHTS RESERVED.

TO THE BEST OF MY KNOWLEDGE, THE SPECIFICATIONS AND PLANS SHOWN HEREIN COMPLY WITH THE APPLICABLE MINIMUM BUILDING CODES IN EFFECT AT THIS TIME.

PUBLIX PROTOTYPE BASIS OF DESIGN
20M
EXPANDED
RECEIVED: 09.14.18

CORPORATE OFFICES, FACILITIES DESIGN
BOX 407, LAKELAND, FL. 33802
(863) 680-5295
PHYSICAL ADDRESS:
3300 AIRPORT RD., LAKELAND, FL. 33811

Publix SUPER MARKETS

FISHER AND ASSOCIATES, LLC.
ARCHITECTS
PLANNERS
INTERIOR DESIGNERS
AA26000738
2315 BELLEAIR RD. CLEARWATER, FL 33764 727.443.4436

PLUMBING DETAILS (2 OF 2)
EAST COBB PUBLIX - #1745
EAST COBB CROSSING SHOPPING CENTER
ROSEWELL ROAD
MARIETTA, GA 30062

RELEASED FOR:	
BID	
PERMIT	07/16/20
CONSTR.	

REVISIONS:

P-6

Issue Date: 04-01-20
Project No.: 220006

© COPYRIGHT 2020

Order Plans @ WWW.LDILine.com