DOOR FINISH SCHEDULE DETAIL REFERENCES ARE TO SHEET YA2 UNO											
MK	TYPE	SIZE	MATERIAL	FINISH	FRAME	FINISH	GLAZING	HEAD	JAMB	THRESH	REMARKS
110A	A	3'-0"x7'-0"x1 3/4" INSUL.	HM 16 GA	PRE-FINISHED DOOR & FRAME PROVIDED AND INSTALLED BY GC	METAL	---	---	11/YA2	12/YA2	---	NOTE 4
120A	B	16'-0"x16'-0" OHD	---	PRE-FINISHED DOOR & FRAME PROVIDED AND INSTALLED BY OWNER	---	---	WINDOW PORTS (4)	5/YA2	6/YA2	---	NOTE 1 & 3
120B	B	16'-0"x16'-0" OHD	---	PRE-FINISHED DOOR & FRAME PROVIDED AND INSTALLED BY OWNER	---	---	WINDOW PORTS (4)	5/YA2	6/YA2	---	NOTE 1 & 3
120C	A	3'-0"x7'-0"x1 3/4" INSUL.	HM 16 GA	PRE-FINISHED DOOR & FRAME PROVIDED AND INSTALLED BY METAL BUILDING MANUFACTURER	METAL	---	---	3/YA2	4/YA2	7/YA2	NOTE 2
120D	A	3'-0"x7'-0"x1 3/4" INSUL.	HM 16 GA	PRE-FINISHED DOOR & FRAME PROVIDED AND INSTALLED BY METAL BUILDING MANUFACTURER	METAL	---	---	3/YA2	4/YA2	7/YA2	NOTE 2

XXX

NOTES:
1. OVERHEAD DOOR TO HAVE ELECTRICAL OPERATOR, PROVIDED AND INSTALLED BY OWNER
2. EGRESS DOORS SHALL BE READILY OPENABLE WITH LEVER STYLE HANDLE FROM THE EGRESS SIDE WITHOUT USE OF A KEY OR SPECIAL KNOWLEDGE.
3. CLOPAY CONTACT: JESSICA WICK; EMAIL: CSI@CLOPAY.COM; PHONE: 800-526-4301
4. 12"X12" LOUVERS

INTERIOR FINISHES (XX)			
NO.	TYPE	DESCRIPTION	REMARKS
53	PAINT	SHERWIN WILLIAMS SW 7038 TONY TAUPE	SATIN FINISH, TO MATCH EXISTING - USED FOR TOUCH UP ONLY
55	PAINT	SHERWIN WILLIAMS - SW 6990 CAVIAR	SATIN FINISH, TYP. ALL PLYWOOD WALLS, TO MATCH EXISTING - USED FOR TOUCH UP ONLY

ROOM FINISH SCHEDULE (VERIFY FINISHES) (X)										
MK	DESCRIPTION	FLOOR	BASE	WALL 1	WALL 2	WALL 3	WALL 4	CEILING	HEIGHT	REMARKS
110	NEW CHANGING ROOM	ETR	---	¾ PLYWOOD (55)	ETR	ETR	¾ PLYWOOD (55)	EXPOSED STRUCTURE	ETR	---
120	NEW SERVICE BAY	EXPOSED CONCRETE	---	¾ PLYWOOD (55)	ETR EXPOSED STRUCTURE	¾ PLYWOOD (55)	¾ PLYWOOD (55)	EXPOSED STRUCTURE	---	REF: ELEVATIONS

SHEET NOTE:

1. INSTALL WATER RESISTANT 1X4 AT EVERY VERTICAL AND HORIZONTAL BUTT JOINT, TYPICAL FOR ALL PLYWOOD WALL FINISH.

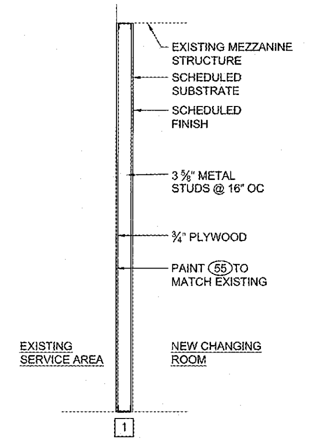

13 PARTITION TYPES
SCALE: 1/2" = 1'-0"

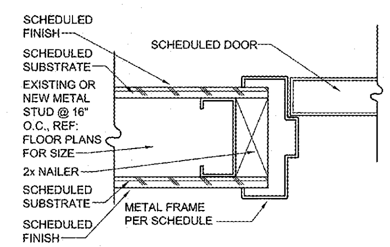

12 JAMB DETAIL
SCALE: 3" = 1'-0"

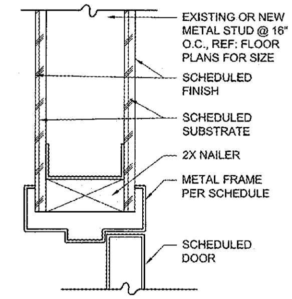

11 HEAD DETAIL
SCALE: 3" = 1'-0"

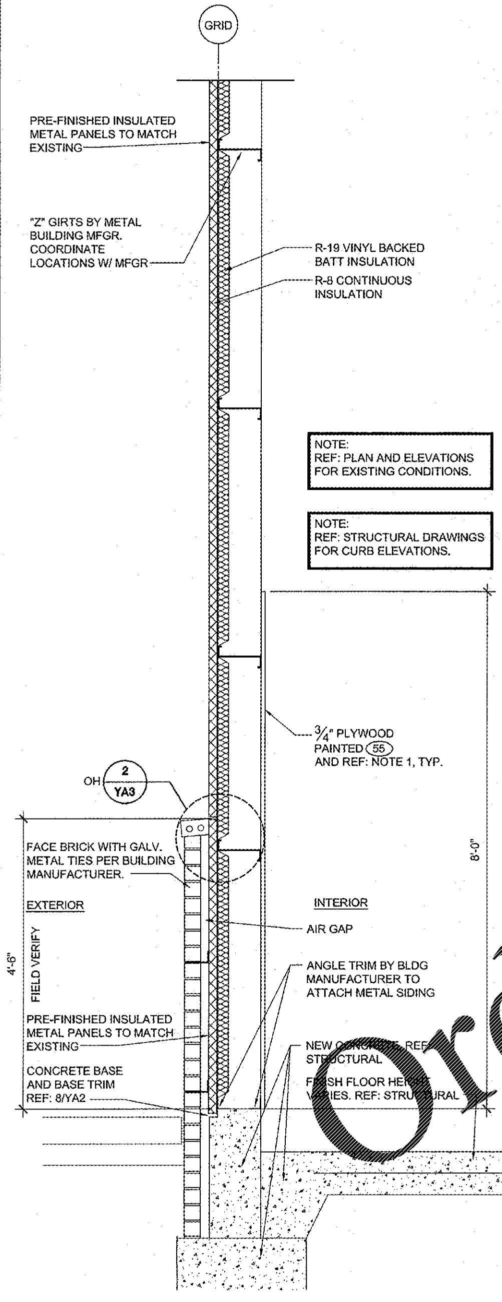

10 WALL SECTION
SCALE: 3/4" = 1'-0"

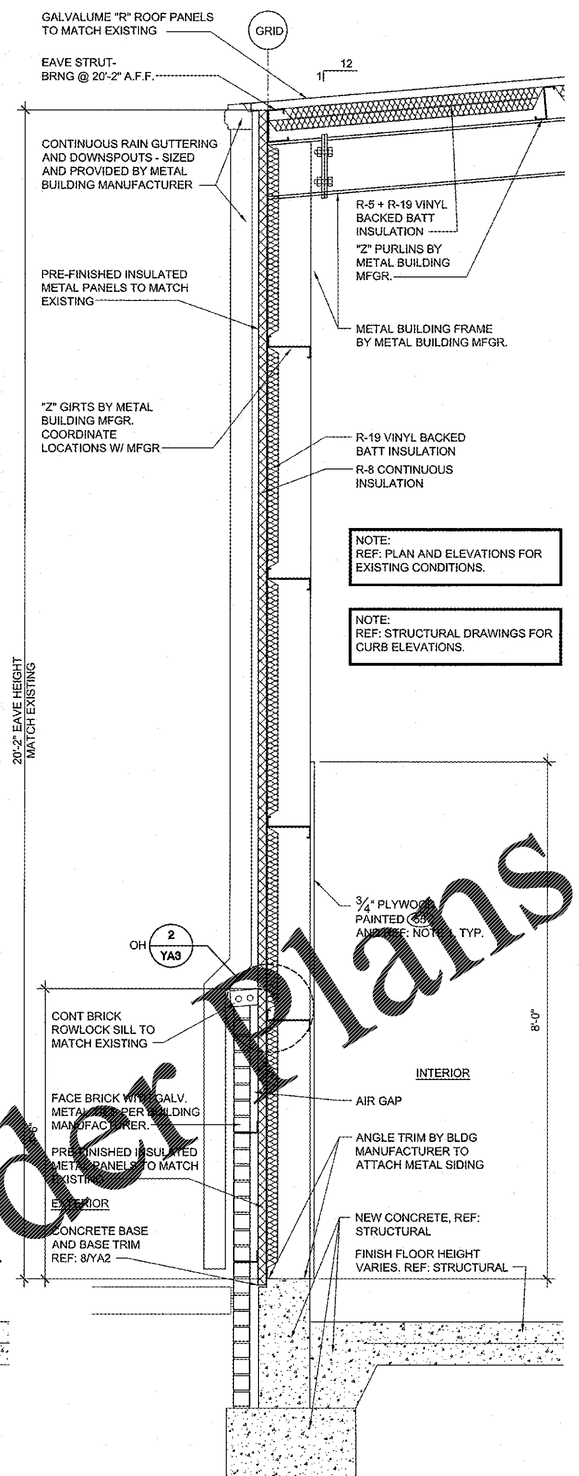

9 WALL SECTION
SCALE: 3/4" = 1'-0"

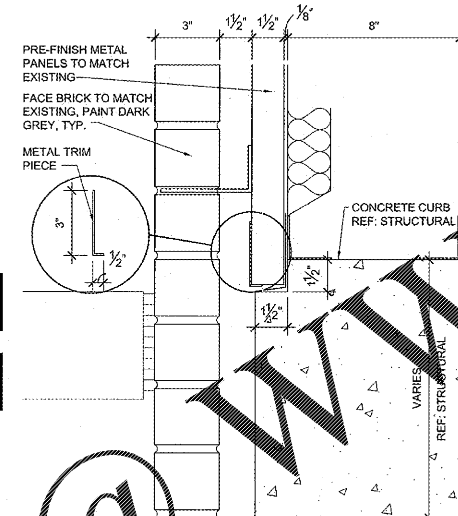

8 BASE TRIM DETAIL
SCALE: 3" = 1'-0"

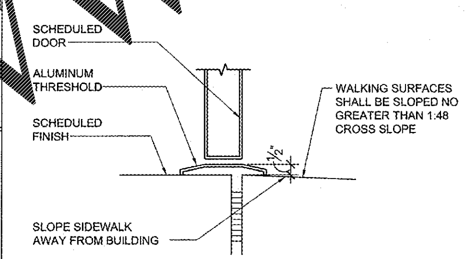

7 THRESHOLD DETAIL
SCALE: 3" = 1'-0"

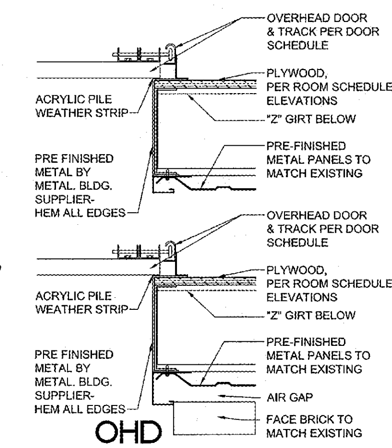

6 OHD JAMB DETAILS
SCALE: 1 1/2" = 1'-0"

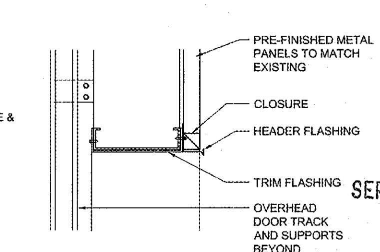

5 OHD HEAD DETAIL
SCALE: 1 1/2" = 1'-0"

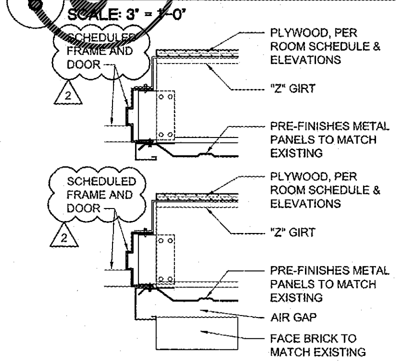

4 JAMB DETAILS
SCALE: 1 1/2" = 1'-0"

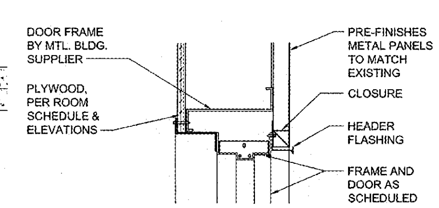

3 HEAD DETAIL
SCALE: 1 1/2" = 1'-0"

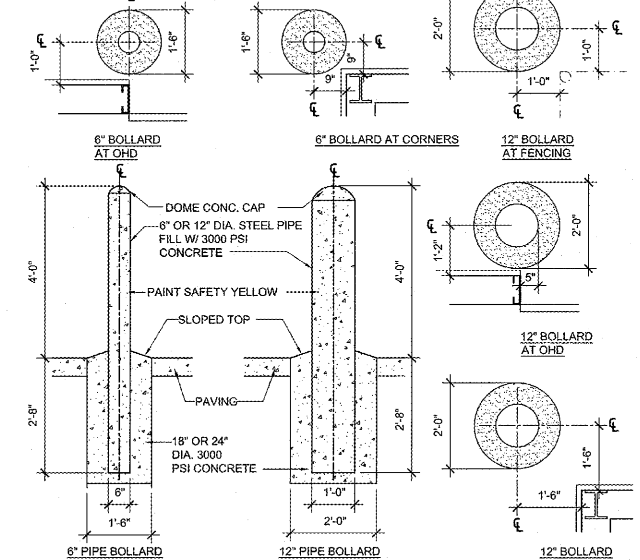

2 BOLLARD DETAILS
SCALE: 1/2" = 1'-0"

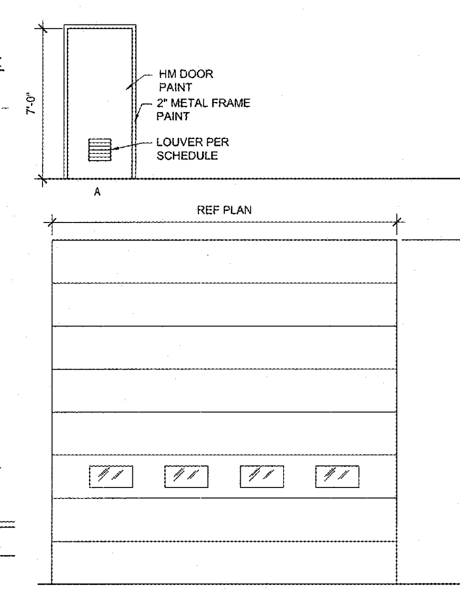

1 DOOR ELEVATIONS
SCALE: 1/4" = 1'-0"

HFA ARCHITECTS ENGINEERS INTERIORS
HARRISON FRENCH & ASSOCIATES, LTD
1705 S. Walton Blvd., Suite 3
Bentonville, Arkansas 72712
t 479.273.7780
f 888.520.9685
www.hfa-ac.com

STIPULATION FOR REUSE
THIS DRAWING WAS PREPARED FOR USE ON A SPECIFIC SITE AT FORT PIERCE, FL CONTEMPORANEOUSLY WITH ITS ISSUE DATE ON 05/14/19, AND IT IS NOT SUITABLE FOR USE ON A DIFFERENT PROJECT SITE OR AT A LATER TIME. USE OF THIS DRAWING FOR REFERENCE OR EXAMPLE ON ANOTHER PROJECT REQUIRES THE SERVICES OF PROPERLY LICENSED ARCHITECTS AND ENGINEERS. REPRODUCTION OF THIS DRAWING FOR REUSE ON ANOTHER PROJECT IS NOT AUTHORIZED AND MAY BE CONTRARY TO THE LAW.

200 S KINGS HWY
FORT PIERCE, FL 34945

SPEEDCO REBRANDING & LIGHT MECHANICAL ADDITION
PROJECT NUMBER: 03-19-60467

Love's® Travel Stop & Country Stores

STATE OF FLORIDA
JAMI MARIE COOK
AR99512
REGISTERED ARCHITECT
SEP 12 2019

Jami Marie Cook, Architect
License #AR99512
Harrison French & Associates, LTD
COA #AA226001029

ISSUE BLOCK		
2	09/13/19	ADD 2

STORE NO.	467
DOCUMENT DATE:	05/14/19
CHECKED BY:	ELR
DRAWN BY:	JTH
PROTO CYCLE:	

SCHEDULES, WALL SECTIONS, AND DETAILS

SHEET: YA2

Sep12,2019-2:28pm - User:jon.adams
M:\03\03-19-60467 Loves - Ft. Pierce, FL 467\CONDOCS\Architectural\125 YA2 SCHEDULES, WALL SECTIONS, AND DETAILS.dwg

Order Plans @ WWW.LDILine.com