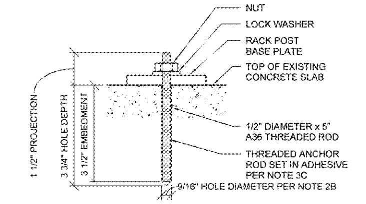

DAMAGED ANCHOR REPAIR PROCEDURE NOTES:

1. DETERMINE DAMAGED BOLT TYPE:
   A. CONCRETE SCREW BOLTS - ONLY HEX-SHAPED HEAD OF BOLT IS VISIBLE ABOVE BASE PLATE.
   B. EXPANSION BOLTS - THREADED ROD AND NUT EXTEND ABOVE BASE PLATE.
2. REMOVE EXISTING DAMAGED ANCHOR BOLT:
   A. CONCRETE SCREW BOLTS - UNSCREW DAMAGED BOLT FROM CONCRETE SLAB.
   B. EXPANSION BOLTS - AFTER REMOVING RACK FRAME CUT BOLT FLUSH WITH CONCRETE SLAB AND DRILL OUT DAMAGED 1/2" DIAMETER BOLT WITH A 9/16" STEEL/METAL DRILL BIT TO HOLE DEPTH SHOWN IN DETAIL ABOVE.
3. INSTALL NEW ANCHOR BOLT:
   A. IF ONLY ONE BOLT WAS INSTALLED, LEAVE THE DAMAGED BOLT IN PLACE, IF POSSIBLE, AND INSTALL A NEW CONCRETE SCREW BOLT IN THE OPEN HOLE. USE A 1/2" DIAMETER DEWALT SCREW BOLT+ x 3" LONG IN THE OPEN HOLE.
   B. CONCRETE SCREW BOLTS - IF A CONCRETE SCREW BOLT WAS REMOVED WITHOUT DAMAGING THE HOLE, THEN REPLACEMENT WITH A NEW CONCRETE SCREW BOLT IS ACCEPTABLE. REPLACE WITH A SCREW BOLT OF THE SAME SIZE AND TYPE. REUSE EXISTING THREADS IN HOLE. HAND THREAD BOLT UNTIL SNUG TIGHT ON BASE PLATE, REF "ANCHOR BOLT DETAIL" ON SHEET FXS2. IF THE HOLE IS DAMAGED, FOLLOW THE EXPANSION BOLTS PROCEDURE.
   C. EXPANSION BOLTS - REPLACE DRILLED OUT EXPANSION BOLTS WITH 1/2" DIAMETER ADHESIVE ANCHORS. HOLE CLEANING PROCEDURE MUST BE FOLLOWED IN ACCORDANCE WITH THE MANUFACTURER'S DIRECTIONS. USE 1/2" DIAMETER THREADED ROD (SEE DETAIL ABOVE) WITH POWERS AC100+ GOLD ADHESIVE. INSTALL PER ICC ESR-2582.

9 TYPICAL ANCHOR REPLACEMENT AT RACK FRAMES
NTS

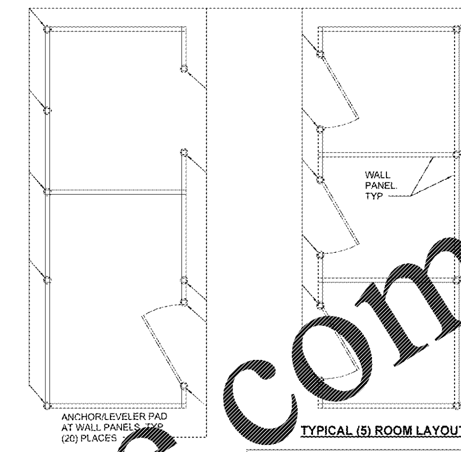

(2) ANCHOR BOLT(S) PER LEVELER AT OUTSIDE CORNERS AND DOOR JAMBS AND (1) ANCHOR BOLT PER LEVELER AT OTHER LOCATIONS: 1/4" DIA DEWALT SCREW BOLT+, REF 3-FXS2. hnom = 1 5/8", ho = 2", (UNO).

NOTES:
1. REFER TO ANCHORAGE PLAN ON SHEET FXS1 FOR FINAL ORIENTATION OF ROOM LAYOUT.
2. REFER TO SUPPLIER FOR INSTALLATION DRAWINGS FOR DIMENSIONS AND FINAL DOOR ORIENTATION.

8 TYPICAL ANCHORAGE PLAN AT CHANGING ROOM WALL PANELS
3/8" = 1'-0"

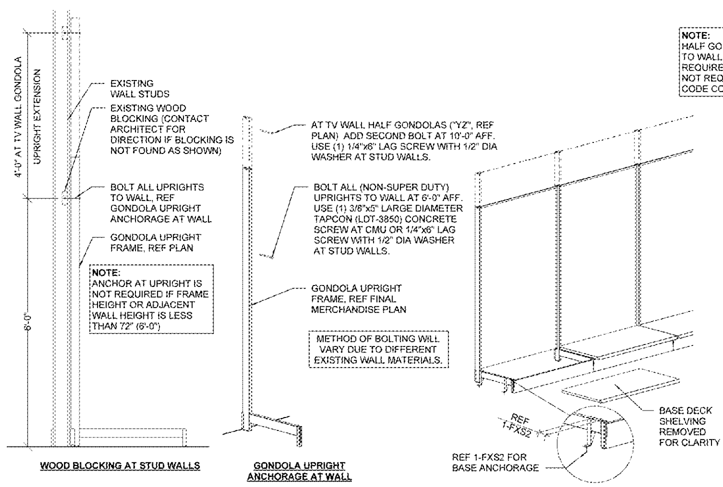

NOTE:
HALF GONDOLAS SHALL BE ANCHORED TO WALL AS SHOWN TO SATISFY OWNER REQUIREMENTS. WALL ANCHORAGE IS NOT REQUIRED FOR SEISMIC DESIGN OR CODE COMPLIANCE.

INSTALLATION NOTES:
1. GAPS BETWEEN SHELVES SHALL NOT EXCEED 5/8".
2. UPRIGHT DEFLECTION SHALL NOT EXCEED 1 3/8" IN A HORIZONTAL PLANE.
3. SHELVES SHALL NOT SLOPE DOWN TO THE FRONT DUE TO UPRIGHT DEFLECTION.
4. SHELVES ABOVE BASE DECK SHELVING LEVEL SHALL NOT EXTEND BEYOND BASE DECK SHELVING AT ANY TIME.
5. EXTENDERS SHALL NOT BE USED ON ANY HALF GONDOLA THAT WILL CREATE A HEIGHT OF 72" OR TALLER UNLESS IT IS ANCHORED TO THE WALL. ALL HALF GONDOLAS 72" OR TALLER MUST BE ANCHORED TO THE WALL AT 72" AFF. REF GONDOLA UPRIGHT ANCHORAGE AT WALL.

7 WALL ANCHOR AT HALF GONDOLA UPRIGHT
NTS

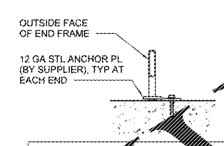

(1) ANCHOR BOLT PER PLATE: 3/8" DIA DEWALT SCREW BOLT+, REF 3-FXS2. hnom = 2", ho = 2 1/2", (UNO).

6 ANCHOR AT END CAP FRAMES
1 1/2" = 1'-0"

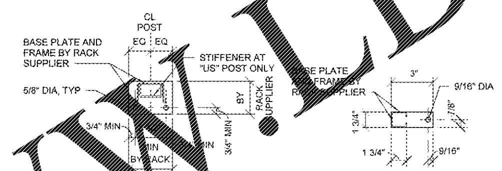

(1) ANCHOR BOLT(S) PER BASE PLATE: 1/2" DIA DEWALT SCREW BOLT+, REF 3-FXS2. hnom = 2 1/2", ho = 2 7/8", ("UA" & "US" POST).

5A - BASE PLATE "UA" & "US" POST

(1) ANCHOR BOLT(S) PER BASE PLATE: 3/8" DIA DEWALT SCREW BOLT+, REF 3-FXS2. hnom = 2", ho = 2 1/2", (AT PLASTIC RECYCLING FIXTURES ONLY)

5B - BASE PLATE "OGP" POST

NOTES:
1. PROVIDE SIZE AND QUANTITY OF ANCHORS AS NOTED ABOVE AT EACH UPRIGHT FRAME POST.
2. WHEN BASE PLATE CONTAINS GREATER NUMBER OF BOLT HOLES THAN ANCHORS SPECIFIED, ADDITIONAL HOLES IN BASE PLATE NEED NOT BE FILLED WITH ANCHOR BOLTS.
3. PROVIDE WASHERS AS REQUIRED TO ESTABLISH REQUIRED EMBEDMENT DEPTH "hnom".
4. RE-USE EXISTING, UNDAMAGED ANCHORS WHERE POSSIBLE. REFERENCE 9-FXS2 WHERE EXISTING ANCHORS ARE DAMAGED OR INTERFERE WITH THE INSTALLATION OF NEW ANCHORS.

5 TYPICAL ANCHOR AT RACK FRAMES
1 1/2" = 1'-0"

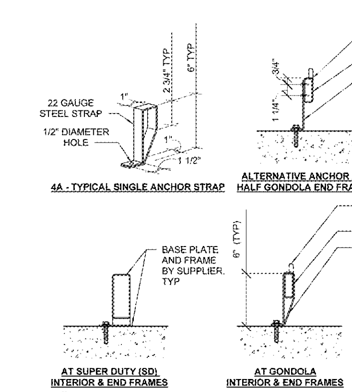

ALTERNATIVE ANCHOR STRAP/BOLT CONNECTION AT END FRAMES - ONLY ALLOWED FOR USE WHEN CLOSURE TUBES DO NOT HAVE A SLOTTED OPENING

(1) ANCHOR BOLT(S) PER STRAP: 3/8" DIA DEWALT SCREW BOLT+, REF 3-FXS2. hnom = 2", ho = 2 1/2", (UNO).

(1) ANCHOR BOLT(S) PER BASE PLATE: 3/8" DIA DEWALT SCREW BOLT+, REF 3-FXS2. hnom = 2", ho = 2 1/2", (AT SUPER DUTY (SD) FIXTURES ONLY)

4 TYPICAL ANCHOR AT GONDOLA FRAMES
1 1/2" = 1'-0"

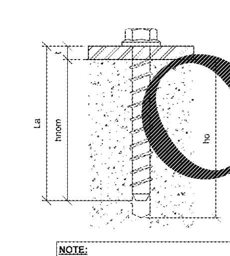

NOTE:
REF SHEET FXS1 FOR SPECIAL INSPECTIONS REQUIREMENTS FOR CONCRETE SCREW ANCHOR BOLTS.

TIGHTENING REQUIREMENTS:
"SNUG TIGHT" - NO GAP BETWEEN HEAD OF ANCHOR BOLT AND BASE PLATE OR ANCHOR STRAP.

t - PLATE/STRAP THICKNESS
hnom - EMBEDMENT DEPTH
ho - MIN HOLE DEPTH
La - LENGTH OF ANCHOR

NOTE:
ALL ANCHOR BOLTS SHALL BE DEWALT SCREW BOLT+. THE ANCHORS MUST BE INSTALLED IN ACCORDANCE WITH THE MANUFACTURER'S PUBLISHED INSTALLATION INSTRUCTIONS AND PER ICC ESR-3889 REPORT. (IN CASE OF CONFLICT, THE ICC ESR-3889 GOVERNS). REF ANCHOR DETAILS FOR DIAMETER AND EMBEDMENT.

NOTE:
IF CENTERLINE OF ANCHOR BOLTS FALLS WITHIN 1 3/4" OF CONTROL JOINT, SHIFT FIXTURE 2" (MAX) PERPENDICULAR TO THE JOINT. OTHERWISE SUBMIT RFI TO THE ARCHITECT FOR ALTERNATE INSTALLATION BEFORE INSTALLING BOLTS.

3 ANCHOR BOLT DETAIL
NTS

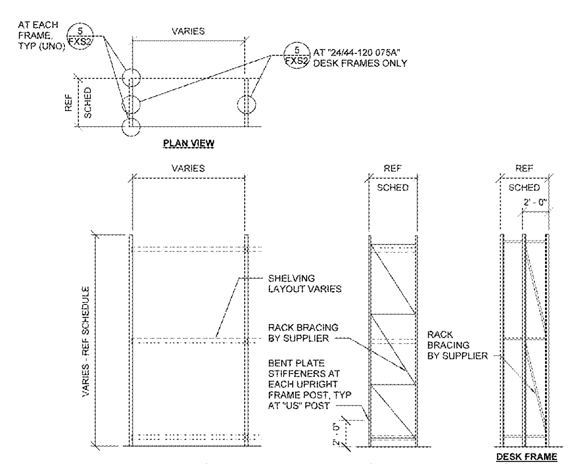

2 STORAGE AREA RACK ELEVATIONS
3/16" = 1'-0"

DESIGN SHELF LOADS:
9" SHELF = 15 LBS/SHELF (PHARMACY)
12" SHELF = 50 LBS/SHELF
15" SHELF = 50 LBS/SHELF (APPAREL)
18" SHELF = 125 LBS/SHELF
= 50 LBS/SHELF (APPAREL)
24"(+) SHELF = 150 LBS/SHELF
= 225 LBS/SHELF (GROCERY)
30" (HD TV) SHELF = 75 LBS/SHELF

NO. OF SHELF LEVELS/FIXTURE HEIGHT:
(4) LEVELS AT HT. < 48"
(5) LEVELS AT 48" < HT. < = 90"
(7) LEVELS AT HT. > 90"
(4) LEVELS AT "24V" & "24X" (FULL) = 78" & 90"
(4) LEVELS AT HD TV = 120" (YZ)
(9) LEVELS AT PHARMACY = 84" (3RX)

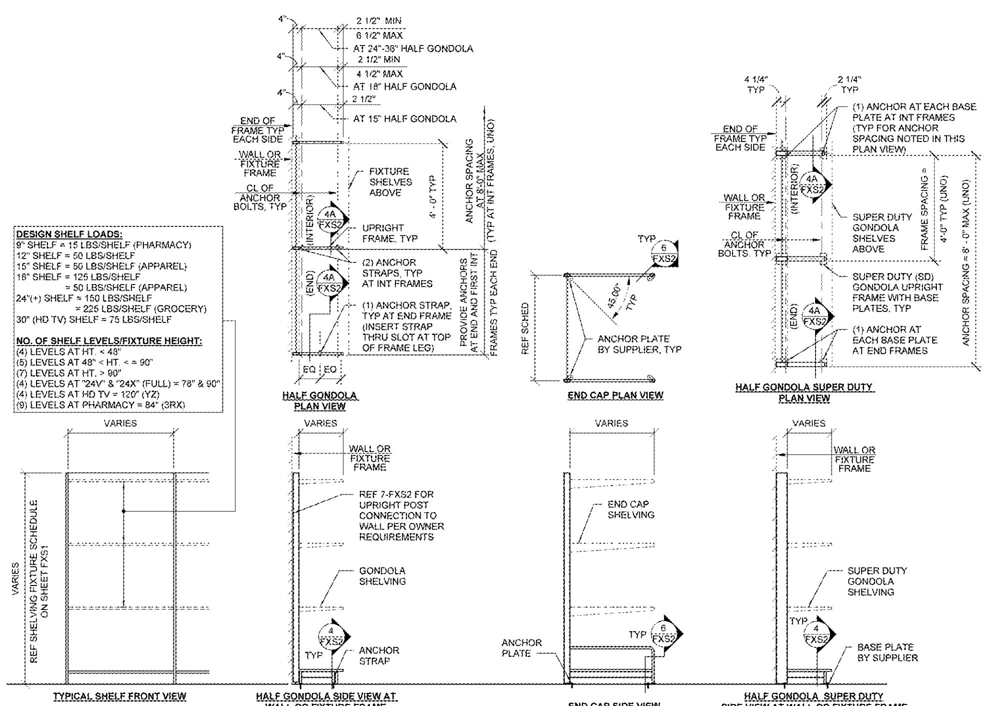

1 TYPICAL GONDOLA AND END CAP SHELVING ELEVATIONS
3/8" = 1'-0"

STIPULATION FOR REUSE
THIS DRAWING WAS PREPARED FOR USE ON A SPECIFIC SITE AT: FAYETTEVILLE, NC CONTEMPORANEOUSLY WITH ITS ISSUE DATE ON 04/15/2020 AND IT IS NOT SUITABLE FOR USE ON A DIFFERENT PROJECT SITE OR AT A LATER TIME. USE OF THIS DRAWING FOR REFERENCE OR EXAMPLE ON ANOTHER PROJECT REQUIRES THE SERVICES OF PROPERLY LICENSED ARCHITECTS AND ENGINEERS. REPRODUCTION OF THIS DRAWING FOR REUSE ON ANOTHER PROJECT IS NOT AUTHORIZED AND MAY BE CONTRARY TO THE LAW.

CONSULTANTS
JBA JOHNSTON BURKHOLDER ASSOCIATES
consulting structural engineers

Walmart
FAYETTEVILLE, NC
STORE NO: 1261-246
JOB NUMBER: USRM-007235 | PROTO: 195 SC

ISSUE BLOCK

CHECKED BY:	BBB
DRAWN BY:	SDH
PROTO CYCLE:	02/28/2020
DOCUMENT DATE:	04/15/2020
JBA PROJECT NO:	2035701261

NOT FOR CONSTRUCTION

OWNER PROVIDED INFORMATION
NOT FOR REGULATORY APPROVAL OR PERMITTING

FIXTURE ANCHORAGE DETAILS

SHEET: FXS2

4/6/2020 11:00:45 AM
C:\Users\sh\Documents\Revit Local Files\1261_Fayetteville NC_WM-Rack_V18_sdh.rvt

Order Plans @ WWW.LDILine.com