LBYD, Inc.
Civil and Structural Engineers
880 Montclair Road
Suite 600
Birmingham, AL 35213
Main (205) 251-4500
PROJECT NO.
101-20-120.001
© copyright 2020
These drawings and design intent are the sole property of LBYD, Inc. which may not be reproduced without written permission

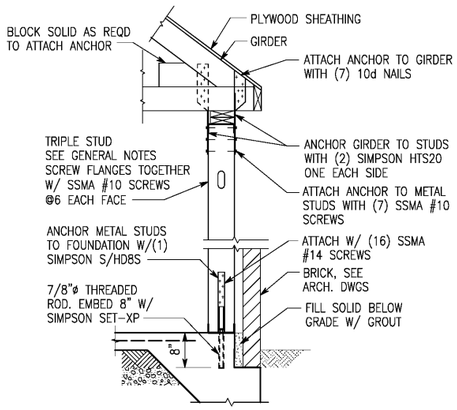

Girder Support at Stud Wall

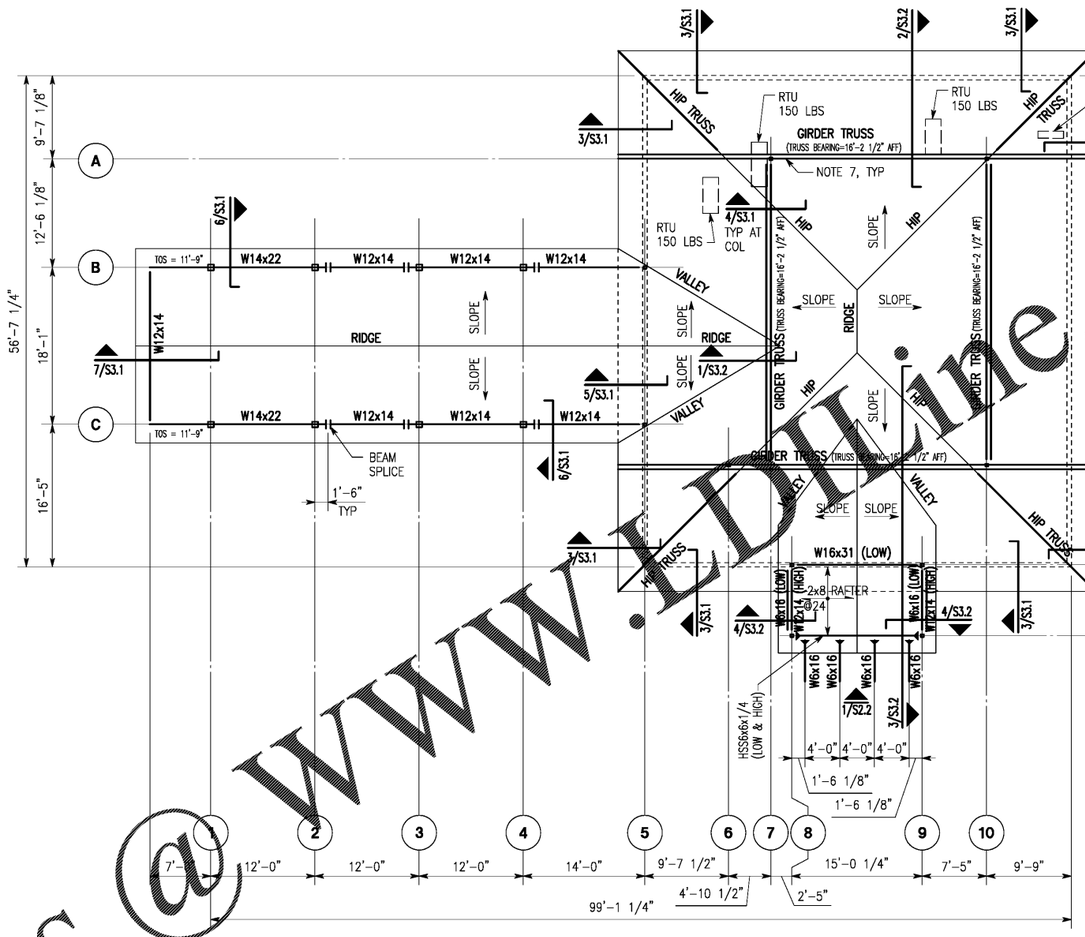

Roof Framing Plan

1/8"=1'-0"

1. TRUSS BEARING ELEVATION: 12'-0" ABOVE FINISH FLOOR, UNLESS NOTED.
2. ROOF FRAMING: WOOD TRUSSES @ 2'-0", SEE GENERAL NOTES.
3. FOR ROOF SHEATHING TYPE AND ATTACHMENT, SEE GENERAL NOTES.
4. MECHANICAL UNIT SIZES AND LOCATIONS SHOWN ARE APPROXIMATE. GENERAL CONTRACTOR TO VERIFY EXACT SIZE, WEIGHTS, AND LOCATIONS W/ MECHANICAL DRAWINGS AND COORDINATE THIS INFORMATION W/ TRUSS DESIGNER.
5. PROVIDE TRIPLE STUD POST AT BEARING POINTS OF GIRDER TRUSSES AND HIP TRUSSES.
6. ◄ DENOTES MOMENT CONNECTION AT END OF BEAM.
7. TRUSS TO TRUSS CONNECTION BY TRUSS SUPPLIER.

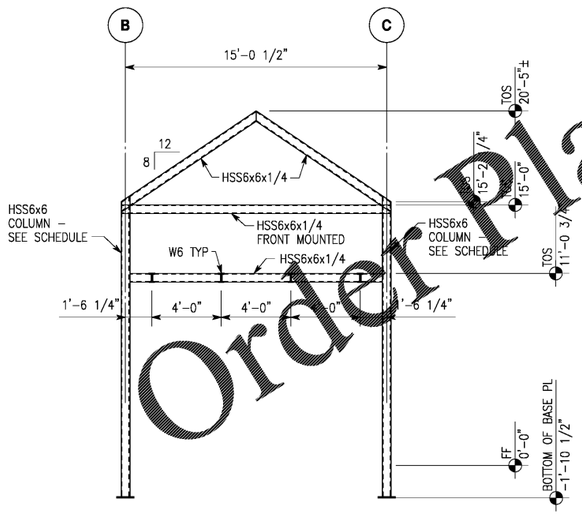

1 Elevation At Column Line F

S2.2 1/4"=1'-0"

Order Plans @ www.LDLine.com

hendon huckestein architects, PC
architecture . planning . interior design
2126 Morris Avenue
Birmingham, AL 35203
Phone (205) 322-1751
Fax (205) 322-1778
email info@hplusha.com
www.hplusha.com

A New Branch Bank for
Tyndall
FEDERAL CREDIT UNION
Dothan, Alabama

RELEASES / DESCRIPTION / DATES

NOT FOR CONSTRUCTION ☐
RELEASED FOR CONSTRUCTION ■

DATE	06.23.2020
DRAWN	GVA
CHECKED	WAW
APPROVED	ROW

PROJECT NUMBER 20012.01

SHEET TITLE
ROOF FRAMING PLAN

DRAWING NO. S2.2