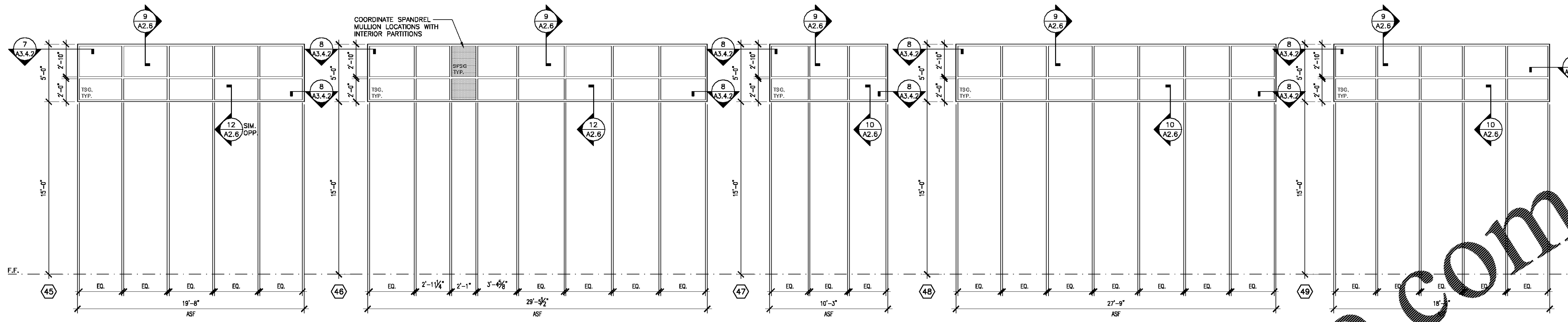


# 1 STOREFRONT SCHEDULE (CONTINUED)

SCALE: 1/4" = 1'-0"

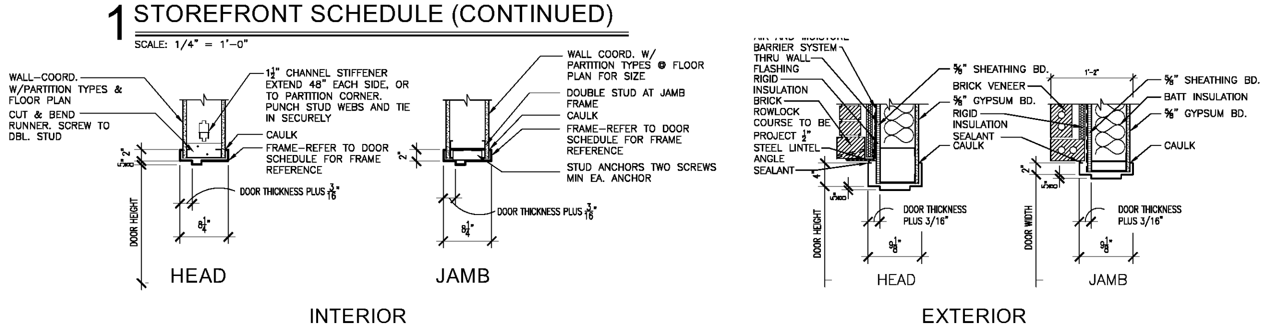


# 2 HOLLOW METAL FRAME DETAILS

SCALE: 1" = 1'-0"

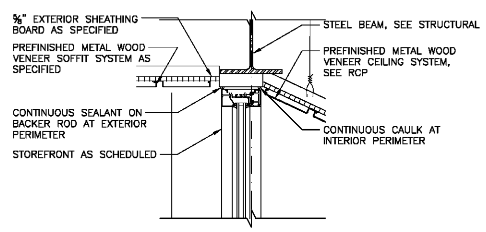


# 3 STOREFRONT DETAILS

SCALE: 1 1/2" = 1'-0" @ HEAD

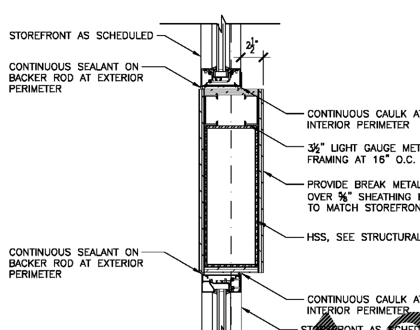


# 4 STOREFRONT DETAILS

SCALE: 1 1/2" = 1'-0" @ HEAD/SILL

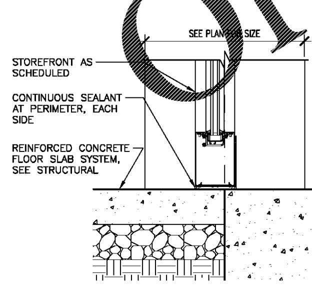


# 5 STOREFRONT DETAILS

SCALE: 1 1/2" = 1'-0" @ SILL

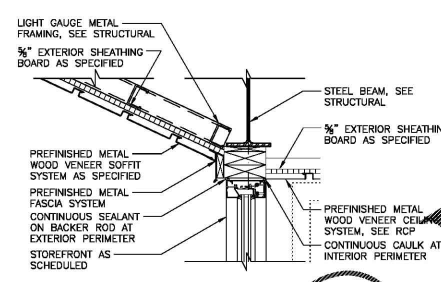


# 6 STOREFRONT DETAILS

SCALE: 1 1/2" = 1'-0" @ HEAD

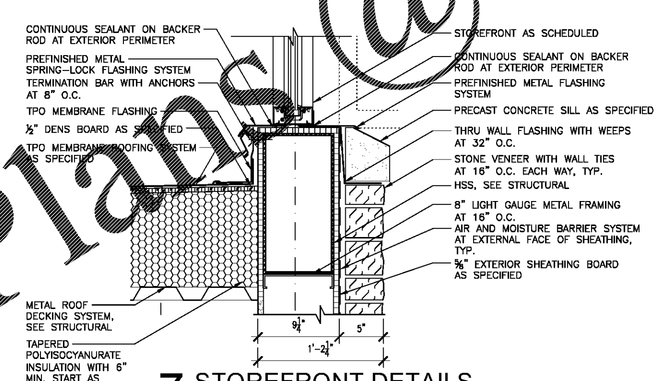


# 7 STOREFRONT DETAILS

SCALE: 1 1/2" = 1'-0" @ SILL

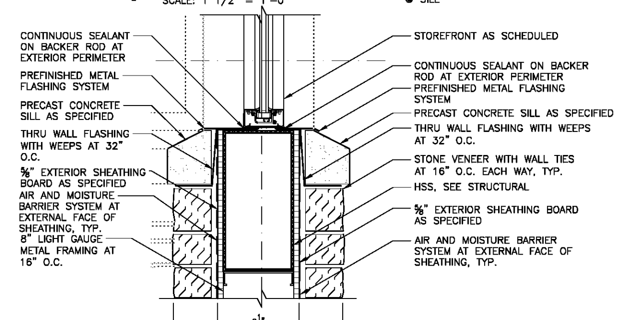


# 8 STOREFRONT DETAILS

SCALE: 1 1/2" = 1'-0" @ SILL

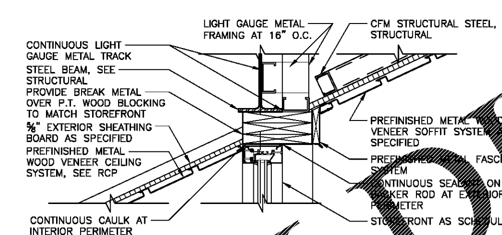


# 9 STOREFRONT DETAILS

SCALE: 1 1/2" = 1'-0" @ HEAD

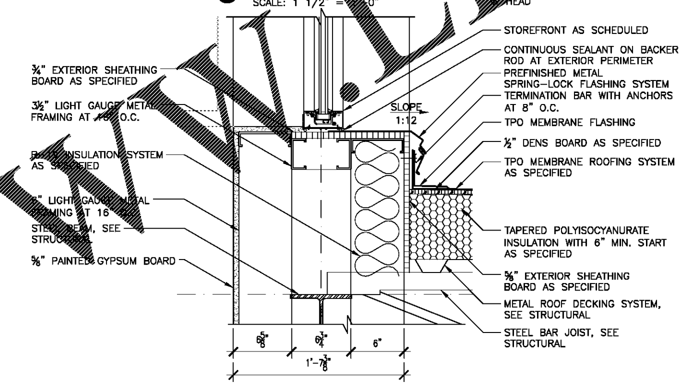


# 10 STOREFRONT DETAILS

SCALE: 1 1/2" = 1'-0" @ SILL

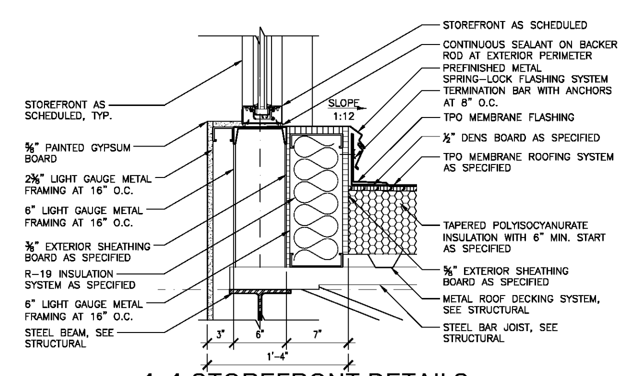


# 11 STOREFRONT DETAILS

SCALE: 1 1/2" = 1'-0" @ SILL

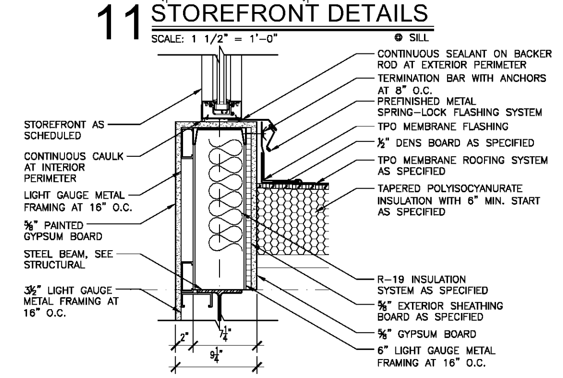


# 12 STOREFRONT DETAILS

SCALE: 1 1/2" = 1'-0" @ SILL

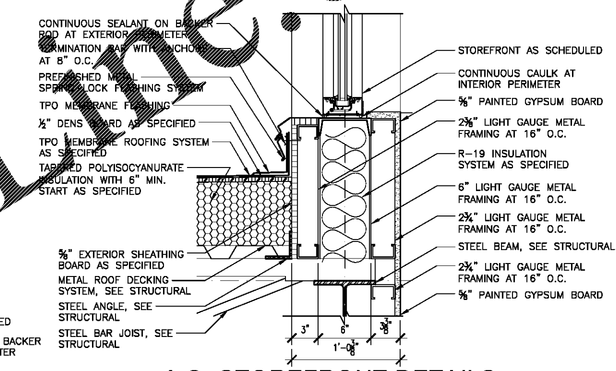


# 13 STOREFRONT DETAILS

SCALE: 1 1/2" = 1'-0" @ SILL

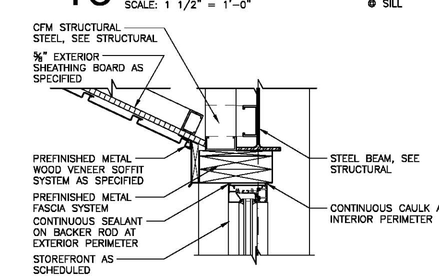


# 14 STOREFRONT DETAILS

SCALE: 1 1/2" = 1'-0" @ HEAD

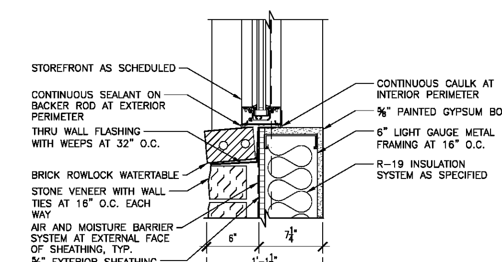


# 15 STOREFRONT DETAILS

SCALE: 1 1/2" = 1'-0" @ SILL

## DOOR AND STOREFRONT LEGEND

| | |
|---|---|
| CSG | ½" THICK CLEAR TEMPERED SAFETY GLASS. |
| CR | ACCESS CONTROLS CARD READER |
| TSG | 1" TINTED INSULATED LOW-E TEMPERED SAFETY GLASS AS SPEC. |
| SCWD | SOLID CORE WOOD DOOR |
| HMD | HOLLOW METAL DOOR |
| HMF | HOLLOW METAL FRAME |
| ASE | PREFINISHED ALUMINUM STOREFRONT ENTRANCE SYSTEM AS SPECIFIED. |
| ASF | PREFINISHED ALUMINUM STOREFRONT FRAME SYSTEM AS SPECIFIED. |
| SPSG | 1" SPANDREL INSULATED TEMPERED SAFETY GLASS AS SPECIFIED. |
| THO | TORNADO STORM SYSTEM WITH MECHANICAL HOLD OPENS |

LATHAN ASSOCIATES ARCHITECTS, P.C.
300 CHASE PARK SOUTH
SUITE 200 . HOOVER, ALABAMA 35244
PH. 205-988-9112 . FAX 205-988-9196

NEW PUBLIC LIBRARY FOR THE CITY OF OPELIKA
GLENN STREET
OPELIKA, ALABAMA 36801

STATE OF ALABAMA No. 3365 RICK N. LATHAN REGISTERED ARCHITECT

SHEET TITLE:
STOREFRONT SCHEDULE, DOOR AND STOREFRONT DETAILS

| | |
|---|---|
| PROJ. MGR.: | S. CALMA |
| DRAWN: | TSS |
| DATE: | JUNE 01, 2020 |
| CHECKED BY: | |
| REVISIONS | |

JOB NO. 19-32

SHEET NO: A2.6

14 OF 37

SEQUENCE NO: 25 / 90

0 1" 2"

25

Order Plans @ WWW.LDOnLine.com