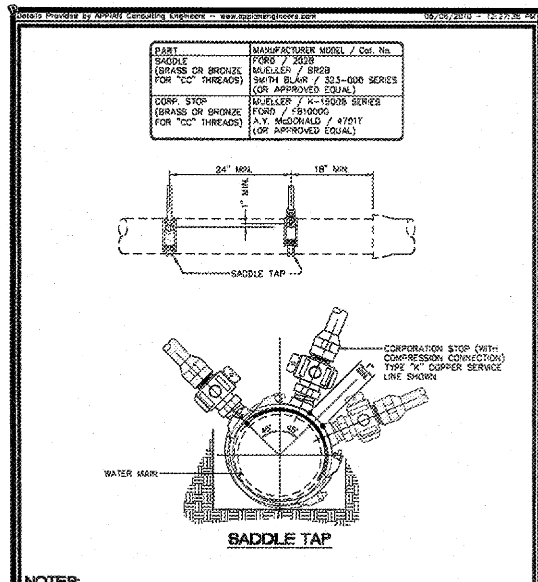

PART	MANUFACTURER MODEL / Cat. No.
SADDLE (BRASS OR BRONZE FOR "CC" THREADS)	FORD / 202B MUELLER / BR2B SMITH BLAIR / 323-000 SERIES (OR APPROVED EQUAL)
CORP. STOP (BRASS OR BRONZE FOR "CC" THREADS)	MUELLER / H-15008 SERIES FORD / FB1000G A.Y. McDONALD / 4701T (OR APPROVED EQUAL)

NOTES:

1. If 2 taps are made on each side of the main there shall be a minimum of 24" horizontal separation. Multiple taps on the same side shall have a minimum 24" horizontal separation and staggered a minimum of 1" vertically to prevent damage to the main.

CITY of WILSON, N.C.
STANDARD WATER TAP DETAIL (1", 1 1/2", & 2" TAPS)
Scale: Not To Scale — Detail # 513.04 — Revision Date: June, 2010 — Sheet # 1 of 1

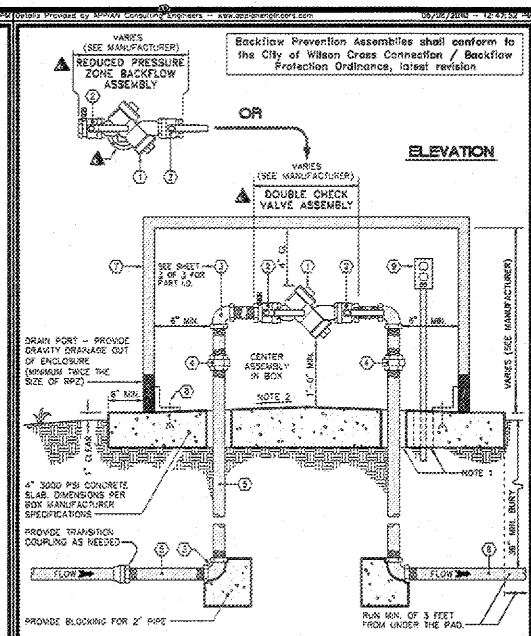

CITY of WILSON, N.C.
3/4" to 2" DCV, RPZ ASSEMBLY (ABOVE GROUND)
Scale: Not To Scale — Detail # 519.02 — Revision Date: June, 2010 — Sheet # 1 of 3

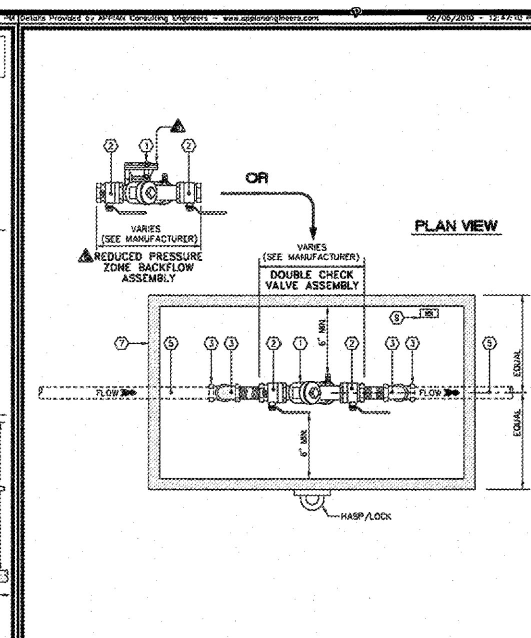

CITY of WILSON, N.C.
3/4" to 2" DCV, RPZ ASSEMBLY (ABOVE GROUND)
Scale: Not To Scale — Detail # 519.02 — Revision Date: June, 2010 — Sheet # 2 of 3

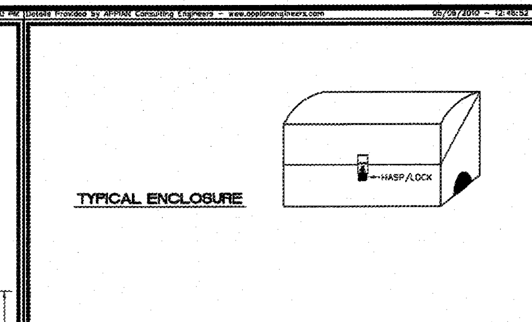

#	PART	MANUFACTURER MODEL / Cat. No.
1	BACKFLOW PREVENTION ASSEMBLY, AS APPLICABLE	SEE SPECS. 02510 1.10 and 2.2.3 -- PRODUCTS
2	1/4 TURN FULL PORT BRONZE BALL SHUT-OFF VALVE	---
3	SCH 80 PVC OR TYPE L COPPER ELBOW	---
4	THREADED UNION	---
5	3/4" THRU 2" SCH 80 PVC OR TYPE L COPPER	---
6	SCH 80 PVC OR TYPE L COPPER	---
7	INSULATED ENCLOSURE WITH LOCKING ACCESS AND, IF ORDERED BY THE CITY ENGINEER OR WATER RESURCES, HEATER (120 V, 1 PHASE 60 HZ) BOX SHALL BE A 1060 ASSE APPROVED WITH A 1060 ASSE PLATE VERIFY FITTINGS WILL FIT INSIDE BOX BEFORE ORDERING	HOTBOX / HB.75 - HB3E (OR APPROVED EQUIVALENT) (NOTE 3)
8	STAINLESS STEEL ANCHOR BOLTS PER BOX MANUFACTURER RECOMMENDED SIZE AND SPACING	---
9	PROVIDE 120V GFCI RECEPTACLE ON A GROUND FAULT CIRCUIT NEAR PIPE RISER. SET MINIMUM 18" ABOVE FLOOR.	UL STD. 943-NEMA 3R.

NOTES:

1. Provide minimum 1" annular clearance around all risers and electrical conduit.
2. Slope floor to drain to ports at both ends. Ensure positive surface grade away from enclosure.
3. Irrigation RPZ's that are removed from uninsulated & unheated enclosures to prevent freezing in the winter months must be capped off.
4. RPZ's may be located in building provided there is pre-existing potable water services under a slab of concrete.

CITY of WILSON, N.C.
3/4" to 2" DCV, RPZ ASSEMBLY (ABOVE GROUND)
Scale: Not To Scale — Revision Date: 2018 — Sheet # 3 of 3

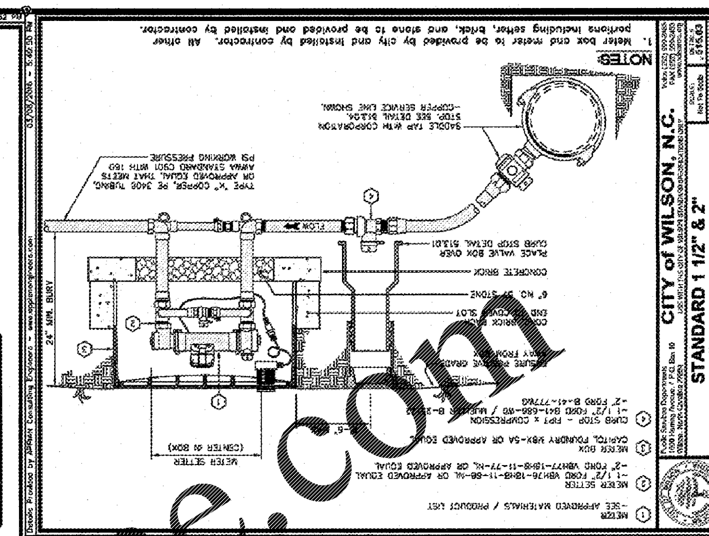

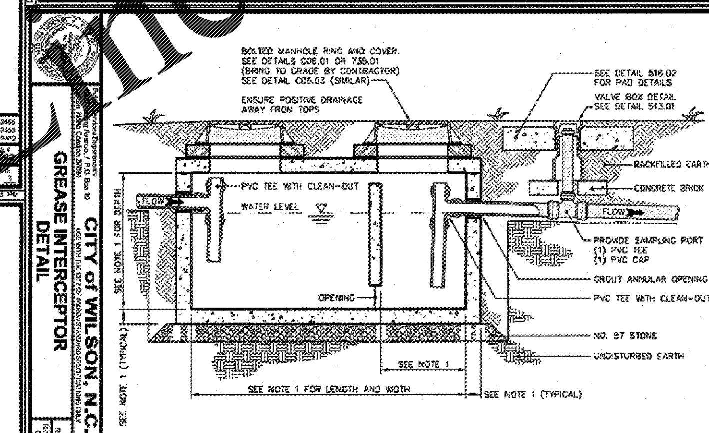

NOTES:

1. Sizes and dimensions to be determined by NCPE and approved by the City of Wilson pretreatment coordinator.
2. Concrete to be a minimum of 4,000 PSI @ 28 days.
3. Reinforcing to comply with H-20 loading.
4. See Std. detail 731.01 for pipe bedding and trenching.

Detail # 737.01

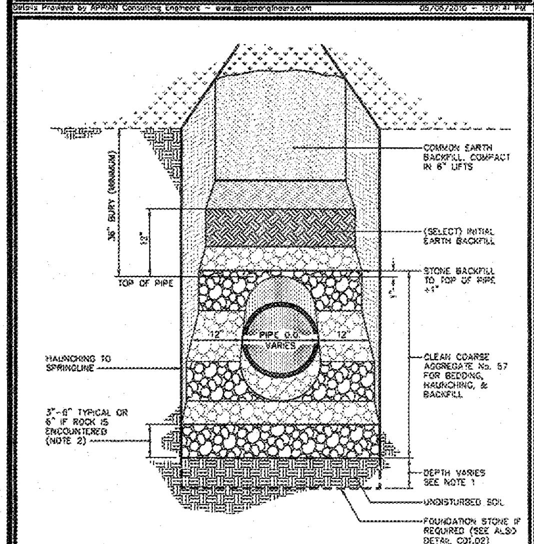

NOTES:

1. Foundation stone shall be required when soil conditions are unsuitable.
2. An additional 1 inch depth of bedding material will be required for each additional 2 feet of trench depth in excess of 16 feet up to a maximum of 12 inches.

CITY of WILSON, N.C.
SANITARY SEWER LINE TRENCH (NON-TRAFFIC AREAS)
Scale: Not To Scale — Detail # 731.01 — Revision Date: June, 2010 — Sheet # 1 of 1

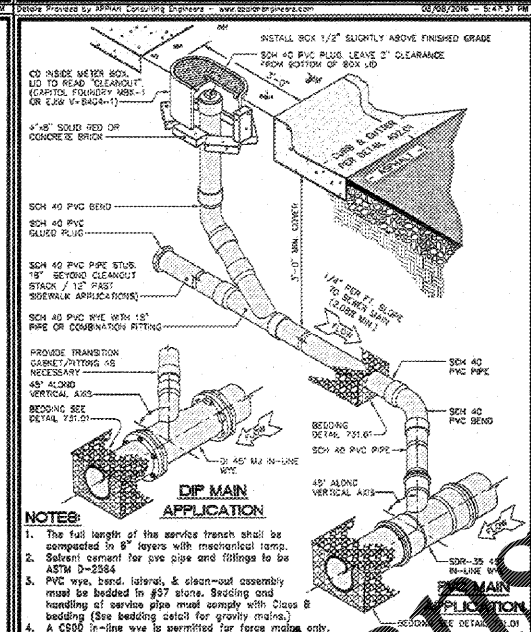

NOTES:

1. The full length of the service trench shall be compacted in 6" layers with mechanical tamp.
2. Solvent cement for pvc pipe and fittings to be ASTM D-2564
3. PVC wye, bend, lateral, & clean-out assembly must be bedded in #57 stone. Bedding and handling of service pipe must comply with Class B bedding (See bedding detail for gravity mains.)
4. A C900 in-line wye is permitted for force mains only.

CITY of WILSON, N.C.
TYPICAL PVC SEWER LATERAL, CLEANOUT, AND TAP
Detail # 733.01 — Revision Date: March, 2016 — Sheet # 1 of 2

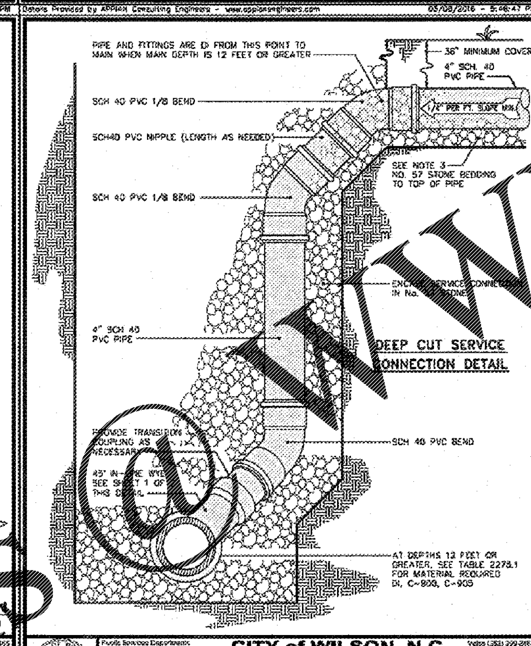

CITY of WILSON, N.C.
TYPICAL PVC SEWER LATERAL, CLEANOUT, AND TAP
Scale: Not To Scale — Detail # 733.01 — Revision Date: March, 2016 — Sheet # 2 of 2

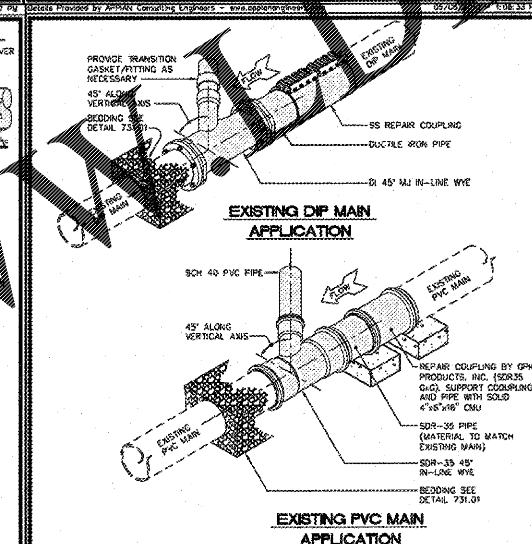

NOTES:

1. Existing mains only. ~ New construction must use In-Line Wye. Detail 733.01.
2. See detail 733.01 for typical pvc sewer lateral, cleanout, and tap.
3. The full length of the trench shall be compacted in 6" layers with mechanical tamp.
4. Solvent cement for pvc pipe and fittings to be ASTM D-2564
5. Wye & coupling must be bedded in #57 stone. Bedding and handling of service pipe must comply with Class B bedding (See bedding detail for gravity mains.)

CITY of WILSON, N.C.
TYPICAL IN-LINE WYE (FOR EXISTING MAINS)
Scale: Not To Scale — Detail # 733.02 — Revision Date: June, 2010 — Sheet # 1 of 1

DETAIL NOTES:

1. *CONTRACTOR SHALL REVIEW **ALL** DETAILS PRIOR TO ANY CONSTRUCTION AND REPORT ANY DISCREPANCIES TO THE OWNER AND ENGINEER IMMEDIATELY.*
2. *ALL DETAILS ON SHEETS SD-1 THROUGH SD-5 SHALL BE COORDINATED WITH THE OWNER AND GOVERNING JURISDICTION PRIOR TO ANY CONSTRUCTION.*
3. *THE CONTRACTOR IS RESPONSIBLE FOR ENSURING ALL STANDARDS AND DETAILS SHOWN ON THESE PLANS MEET ALL LOCAL AND STATE REQUIREMENTS PRIOR TO ANY CONSTRUCTION. LOCAL AND STATE DETAILS, STANDARDS AND SPECIFICATIONS SHALL ALWAYS TAKE PRECEDENCE.*

Order Plans @ WWW.LDLine.com

COMMERCIAL SITE DESIGN
8312 CREEDMOOR ROAD
RALEIGH, NORTH CAROLINA 27613
(919) 848-6121, FAX: (919) 848-3741
WWW.CSITEDESIGN.COM

CLIENT:
WIL DOR RESTAURANT GROUP
7408 SIEMENS ROAD
WENDELL,
NORTH CAROLINA 27591

PROJECT:
POPEYES
1702 RALEIGH ROAD PARKWAY WEST
WILSON, NORTH CAROLINA

DETAILS

LOUISIANA KITCHEN

REVISIONS:

DATE	COMMENTS
11-12-19	CITY COMMENTS

COMMERCIAL SITE DESIGN, PLLC — REGISTERED CORPORATION — P-0266 — RALEIGH, NORTH CAROLINA
NORTH CAROLINA PROFESSIONAL ENGINEER SEAL 26411 — JEREMY J. BECKETT

PROJECT NO.	POP-1904
FILENAME:	POP1904-DT3
DRAWN BY:	DDH
SCALE:	N.T.S.
DATE:	10-02-2019
SHEET NO.	C-8