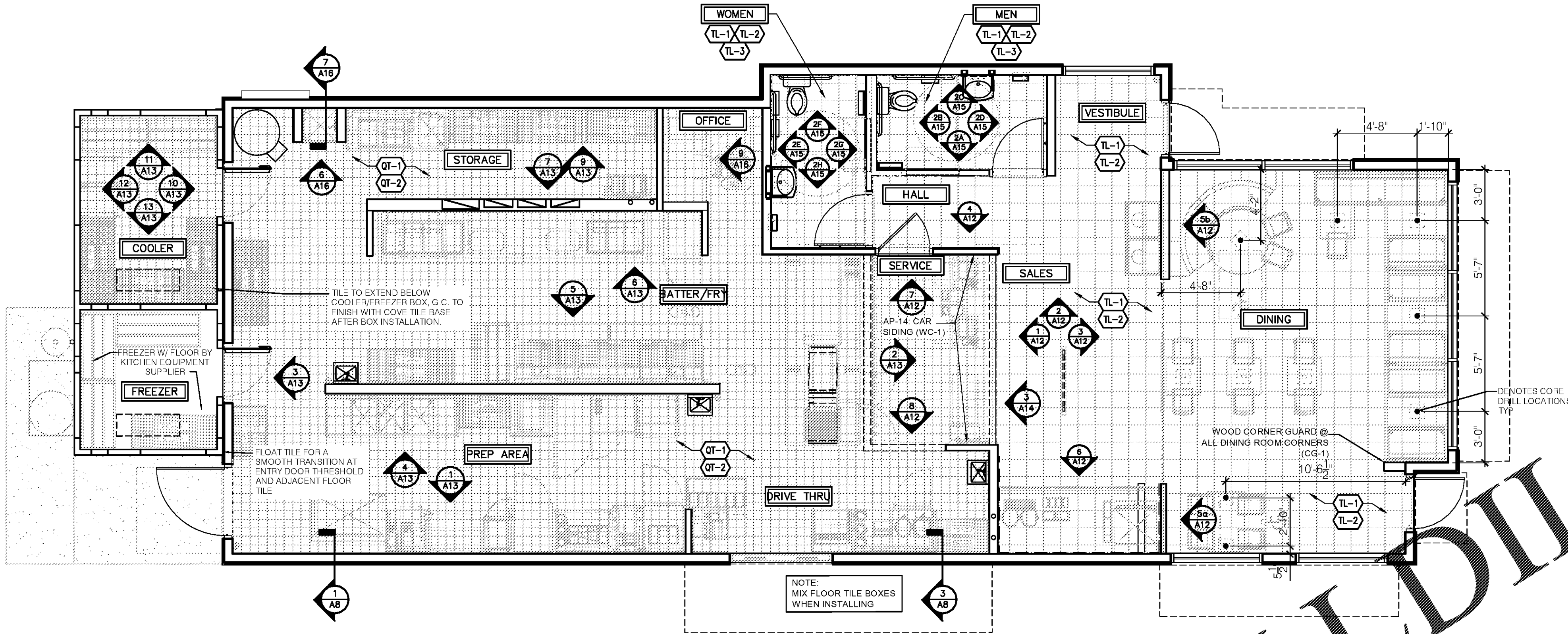

1 FLOOR FINISH PLAN
Scale: 1/4"=1'-0"

DIVISION 9: FINISHES

SECTION 9B: TILE

GENERAL PROVISIONS

1. SCOPE: FURNISH AND INSTALL ALL TILE FLOORS AND WALLS.

2. QUALITY CONTROL: ALL TILE MATERIALS AND INSTALLATIONS SHALL CONFORM TO THE RECOMMENDED PRACTICES OF THE TILE COUNCIL OF AMERICA, INC.

3. REFER TO THE POPEYES VENDOR DIRECTORY FOR APPROVED SUPPLIERS.

MATERIALS

1. USE CERAMIC AND QUARRY TILE AS SHOWN ON FINISH SCHEDULE.

2. GROUT:
A. JOINTS IN FLOOR WALLS, AND BASE: EPOXY IS REQUIRED - HYDROMENT V-POXY AARII OR APPROVED ALTERNATE HYDROMENT SANDED JOINT FILLER AS MANUFACTURED BY THE UPCO COMPANY OR EQUAL CUSTOM BUILDING PRODUCTS. COLOR AS SHOWN ON FINISH SCHEDULE.

3. CONCRETE TILE BACKER BOARD:
A. DUROCK NAILABLE CONCRETE BACKER BOARD BY USG INDUSTRIES, INC., 101 S. DR., CHICAGO, IL 60606 ATTN: DEPT. #TOS-585. TO BE INSTALLED PER MANUFACTURER'S SPECIFICATIONS.

PERFORMANCE

1. INSTALLATION:

A. INTERIOR CERAMIC WALL TILE SHALL BE INSTALLED IN ACCORDANCE WITH TILE COUNCIL METHOD W 243 GYPSUM BOARD, LATEX PORTLAND CEMENT BOND COAT WITH HYDROMENT TILE-MATE 710 WITH FLEX-A-LASTIC ADDITIVE.

B. INTERIOR FLOOR TILE AND BASE SHALL BE INSTALLED IN ACCORDANCE WITH TILE COUNCIL THIN-SET METHOD F113 DRY SET MORTAR OR LATEX PORTLAND CEMENT MORTAR WITH HYDROMENT TILE-MATE 760 WITH FLEX-A-LASTIC ADDITIVE. IN ALL AREAS EXCEPT KITCHEN & RESTROOMS WHERE SLAB IS DEPRESSED 2" - USE THICK SET METHOD AS DESCRIBED BELOW IN ITEM #2.
- SLOPE FLOOR PER FOUNDATION PLAN.

C. JOINTS IN FLOOR AND BASE JOINTS IN FLOORS AND BASE IN FOOD PREP, SUPPLY, SALES, UTILITY WASH, AND TOILETS TO BE INSTALLED IN ACCORDANCE WITH THE TILE COUNCIL METHOD OF #115 DRY-SET MORTAR WITH EPOXY GROUT IN LIEU OF CEMENT BASE GROUT. GROUT SHALL BE HYDROMENT U-POXY AARII. ALTERNATE "HYDROMENT JOINT FILLER" BY THE UPCO CO., IN ACCORDANCE WITH MANUFACTURER'S DIRECTIONS. JOINTS SHALL BE 1/4" WIDE AND COMPLETELY FILLED LEVEL WITH THE SHOULDER OF THE TILE AND THEN TOOLED TO A SMOOTH DENSE FINISH.

D. JOINTS IN WALL TILE SHALL BE GROUTED WITH HYDROMENT JOINT FILLER IN ACCORDANCE WITH MANUFACTURER'S INSTRUCTIONS AND SHALL BE DAMP CURED. THE TILE SHALL BE CLEANED OF SURFACE GROUT AS WORK PROCEEDS USING DRY GROUT AND BURLAP CLOTH. NO ACID CLEANER SHALL BE USED.

E. CLEAR SILICONE SEALANT AROUND PERIMETER TILE EDGES WHEN ABUTTING TO OTHER MATERIALS.

2. THICK-SET FLOOR INSTALLATION METHOD: (OPTIONAL)
THICK-SET FLOOR INSTALLATION IN ACCORDANCE WITH TILE COUNCIL METHOD F112 CEMENT MORTAR MAY BE USED WITH 1/2" SETTING BED IN LIEU OF THIN-SET METHOD AT THE CONTRACTOR'S OPTION THROUGHOUT, PROVIDING FINISH FLOOR ELEVATIONS REMAIN AS SHOWN AND SLABS ARE DEPRESSED 2" TO COMPENSATE FOR 1 1/2" MINIMUM BED THICKNESS.
FOR KITCHEN & RESTROOM AREAS ONLY (SEE ITEM 'C' ABOVE) SEE SHEET S-1 FOR DEPRESSED SLAB LOCATIONS WHERE THIS METHOD IS REQUIRED.

SECTION 9E: PAINTING

GENERAL PROVISIONS

1. SCOPE: SUPPLY ALL LABOR, MATERIALS, AND EQUIPMENT NECESSARY FOR THE PROPER PAINTING AND FINISHING OF THE BUILDING.

MATERIALS

1. PAINT BRANDS AND COLORS ARE GIVEN IN THE FINISH SCHEDULE TO SHOW EXACT COLOR REQUIRED.
UNSPECIFIED BRANDS OF MATERIALS SUCH AS SHELLAC, TURPENTINE, THINNER, ETC., SHALL BE PURE AND OF THE BEST QUALITY OBTAINABLE. ALL MATERIALS SHALL BE USED WITHOUT ALTERATIONS AND ONLY AS SPECIFIED BY THE PAINT MANUFACTURER.

2. PUTTY AND FILLERS SHALL BE AS RECOMMENDED BY THE PAINT MANUFACTURER.

3. CAULKING MATERIAL SHALL BE "MONO" ACRYLIC TERPOLYMER SEALANT, WHITE COLOR, BY TREMCO MANUFACTURING CO., CLEVELAND, OH, OR APPROVED EQUAL.

PERFORMANCE

1. WORKMANSHIP:
ALL SURFACES TO BE PAINTED SHALL BE CLEAN AND FREE OF DIRT, DUST, OR GRIT BEFORE PAINTING IS STARTED. PAINTING SHALL NOT BE DONE WHEN THERE IS SWEEPING OR EXCESSIVE DUST IN THE AIR. ALL PITCH STREAKS, RESIN, SPOTS, ETC. SHALL BE CLEANED OF ALL RESIDUE AND TOUCHED UP WITH SHELLAC BEFORE PAINTING. PUTTY ALL NAIL HOLES, CRACKS, ETC., IN WOODWORK AFTER THE FIRST COAT IS APPLIED. WHERE THE WOOD DOES NOT DRY TO A UNIFORM SHEEN OVER THE ENTIRE SURFACE, SPOT PRIME THE AREAS THAT INDICATE SUCTION BEFORE APPLYING FINISH COATS. UNDERCOATS OF PAINT SHALL BE TINTED TO A COLOR APPROXIMATING THE FINISH COATS WITH ENOUGH VARIATION IN COLOR TO PERMIT VISUAL INSPECTION OF MATERIALS DURING THIS WORK. ALL MATERIALS SHALL BE EVENLY SPREAD AND FLOWED ON WITHOUT RUNS, SAP, OR EXCESSIVE BRUSH MARKS. LEVEL 4 DRYWALL FINISH MINIMUM.
2. STEEL DOORS, FRAMES, GATES, PIPE GUARDS, LIGHT POLES, EXPOSED SIGN SUPPORTS, GAS PIPES, HANDRAILS, AND OTHER FREE-STANDING METAL ACCESSORIES:
A. PRE-PRIMED: TWO (2) ADDITIONAL COATS OF EXTERIOR ENAMEL BENJAMIN MOORE IRON CLAD #163 OVER FINELY-SANDED PRIMER. SEE FINISH SCHEDULE FOR COLOR.
B. BARE METAL: TWO (2) COATS BENJAMIN MOORE IRON CLAD #163 OVER TWO (2) COATS FINELY-SANDED METAL PRIMER. SEE FINISH SCHEDULE FOR COLOR.
NOTE: GAS PIPE SHALL BE PAINTED ONLY AFTER PRESSURE TESTED.

3. ALUMINUM LIGHT POLES:
POLES SHALL BE PROVIDED BY HERMITAGE LIGHTING AS A PART OF THEIR LIGHTING PACKAGE. THESE POLES COME PREFINISHED IN DARK BRONZE, AND IS INSTALLED BY THE SITE LIGHTING CONTRACTOR. CONCRETE POLES ARE ALLOWED IF REQUIRED BY THE LOCAL JURISDICTION, AND SHALL BE SEALED OR FINISHED ACCORDING TO THE LOCAL CODE.

4. SIGN POLES:
SIGN POLES SHALL BE PRIMED AND PAINTED WITH TWO COATS. REFER TO FINISH SCHEDULE FOR FINISH.

SECTION 9F: PREFINISHED PANELS

GENERAL PROVISIONS

1. SCOPE:
FURNISH AND INSTALL PANELS AND MATCHING TRIM, INTERIOR PREFINISHED PANELS, TRIM, CORNER GUARDS, AND ACCESSORIES.

2. NOTES: REFER TO NATIONAL ACCOUNT DIRECTORY.

MATERIALS

1. MARLITE PLANKS AND TRIM, 16" X 8'-0" X 1/4", COLOR AND TEXTURE AS SHOWN ON FINISH SCHEDULE.
ADHESIVE: MARLITE BRAND C-375 WATERPROOF ADHESIVE.
CAULKING: MARLITE BRAND CAULKING.

2. FIBERGLASS REINFORCED PANELS

A. MARLITE TYPE 120 TOS FRP PANELS, 4' X 8' X 0.10". AND MATCHING TRIM, CLASS C/III. (USE 10' LENGTHS FOR CEILINGS > 8')
COLOR: SEE FINISH SCHEDULE.
ADHESIVE: MARLITE BRAND C-375 WATERPROOF SOLVENT-BASED ADHESIVE.
CAULKING: MARLITE SILICONE BRAND SEALANT.

B. WHERE REQUIRED BY CODE ONLY, FIRE-RATED FRP PANELS WITH CLASS A/1 ARE AVAILABLE FOR MARLITE.

3. STAINLESS STEEL CORNER GUARDS.
A. EXTRA DUTY CORNER GUARDS AT OUTSIDE WALL CORNERS IN FOOD PREP, POT WASH, AND STORAGE AREAS AS SHOWN SHALL BE STAINLESS STEEL, AND SHALL EXTEND FROM TOP OF TILE BASE TO THE CEILING, WITH CONCEALED FASTENERS, CLEAR CAULK

ACCEPTABLE MANUFACTURER:
PROVIDE ALL CORNER GUARDS FROM A SINGLE SOURCE.

MATERIALS:
STAINLESS STEEL: CORNER GUARDS SHALL BE MANUFACTURED FROM TYPE 304, 16 GAUGE STAINLESS STEEL.

MARLITE PANELS:

PERFORMANCE

1. INSTALL MARLITE PANELS IN ACCORDANCE WITH MANUFACTURER'S INSTRUCTIONS. APPLY MATCHING TRIM BEFORE INSTALLING PANELS. FLUE UP PANELS ON GYPSUM BOARD, SETTING ALL PANELS INTO TRIM IN A BED OF CLEAR CAULK. USE MARLITE SOLVENT-BASED ADHESIVE C-375 OR EQUAL APPROVED BY MANUFACTURER. DO NOT APPLY WHEN TEMPERATURE IS LESS THAN 40 DEGREES F. CAULK AROUND ALL JOINTS, TRIM, AND ABUTTING EDGES WITH CLEAR SILICONE.

SECTION 9G: LAMINATE WALLS

1. FURNISH AND INSTALL PANELS PER MANUFACTURES INSTALLATION REQUIREMENTS. REFER TO FINISH SCHEDULE.

2. APPLY LAMINATE TO 1/2" PLYWOOD SUBSTRATE AND ADHERE PANELS WITH MANUFACTURER'S RECOMMENDED GLUE AND ANCHORS.

3. ALL JOINTS TO BE BUTTED TOGETHER.

2 SPECIFICATIONS

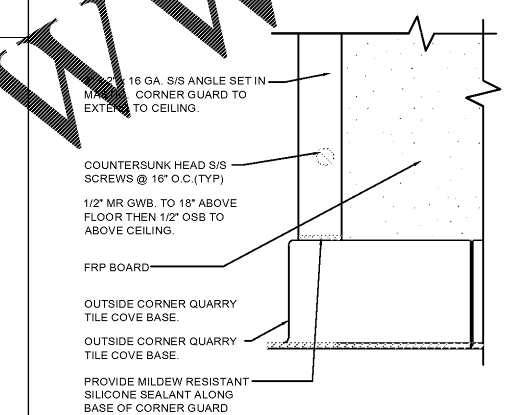

3 KITCHEN CORNER GUARD ELEVATION DETAIL
3" = 1'-0"

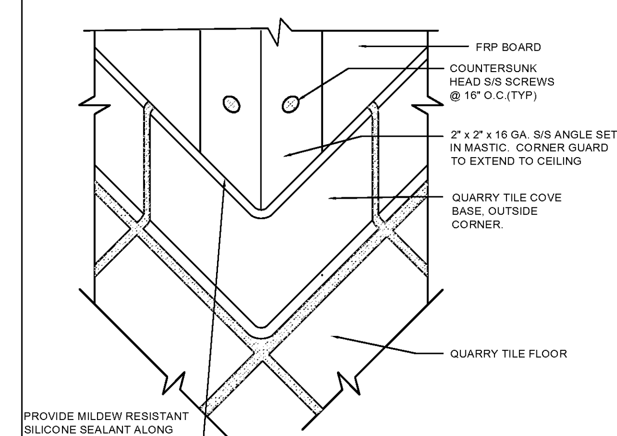

4 KITCHEN CORNER GUARD ISOMETRIC DETAIL
3" = 1'-0"

POPEYES LOUISIANA KITCHEN	NOLA MAKERS SERIES INTERIOR FINISH SCHEDULE
COMPLETE WORKING LIST	UPDATE: 4/20/2020

FLOORING

Mark	Location	Supplier / Manuf.	Material	Specification	Color	Finish
TL-1	DINING/RESTROOM AREA COVE BASE TILE	CREATIVE MATERIALS CORPORATION	PORCELAIN	BUSINESS	SLATE	6" x 24" BASE
TL-2	DINING/RESTROOM AREA RESTROOM TILE					12" x 12" (CUT IN FIELD)
TL-3	RESTROOM WALLS					6" x 8"
G-1	GROUT FOR ALL FLOOR TILES	MAPEI	GROUT	ULTRACOLOR PLUS	IRON #107	
G-2	THIN-SET FOR ALL TILES	MAPIE	THIN SET	ULTRAFLEX LFT	GREY	
G-3	WHITE GLOSSY THIN BRICK	MAPEI	GROUT	ULTRA COLOR PLUS FA		
QT-1	KITCHEN AREA FLOOR	CREATIVE MATERIALS CORPORATION	QUARRY TILE	GREY ABRASIVE	BRICK	ABRASIVE 6"x6"
QT-2	KITCHEN AREA BASE					QUARRY 6"x6" COVE BASE

WALLS AND DOORS

Mark	Location	Supplier / Manuf.	Material	Specification	Color	Finish
BR-1	DINING ROOM AREAS	CREATIVE MATERIALS CORP.	THIN BRICK	FLAGSTAFF STANDARD		PAINT P-1
P-1	BEADBOARD/BRICK WALLS & SOFFIT/CEILING	BENJAMIN MOORE	ACRYLIC LATEX	PRIME / PAINT	[illegible] DISTANT [illegible]	1 COAT #372, PRIMER 2 COATS, ULTRA SPEC 500 EGGSHELL
P-2	DOOR FRAMES	BENJAMIN MOORE	ACRYLIC LATEX	PRIME / PAINT	2133-[illegible]ACK JA[illegible]	1 COAT #372, PRIMER 2 COATS, ULTRA SPEC 500 EGGSHELL
P-3	BRICK ACCENT	SHERWIN WILLIAMS	ACRYLIC LATEX	PRIME / PAINT	SW 66[illegible] INVIGORATE	1 COAT #372, PRIMER 2 COATS, EGGSHELL
P-4	RESTROOM WALLS AND LED CHICKEN GRAPHIC	BENJAMIN MOORE	ACRYLIC LATEX	PRIME / PAINT	OC-669 OCEANIC TEAL	1 COAT PRIMER 2 COATS, ULTRA SPEC 500 EGGSHELL
PL-1	DOOR FINISH	ARBORITE	LAMINATE	W465	MOCHA CHERRY	SEMI GLOSS
F-1	SERVICE COUNTER, TOILET ROOM HALLWAY	PAINTED NANTUCKET BEADBOARD	BEADBOARD PANELING	VERTICAL AND HORIZONTAL	PAINT P-1, BENJAMIN MOORE ULTRA SPEC 500 EGGSHELL OC-68 DISTANT GRAY	4" CHANNEL BEAD 1/8" x 1/8"
TL-4	MENU BOARD TILE	CREATIVE MATERIALS CORP.	GLAZED THIN BRICK		WHITE GLOSSY	8" x 2"
W-1	KITCHEN WALLS	MARLITE	[illegible]	FRP	P100 - WHITE	PEBBLE FINISH
SW-1	WINDOW SILLS	GENERAL CONTRACTOR	SOLID SURFACE		BLACK	
MT-01	COUNTER CANOPY, QUEUE	idX	METAL FRAME		TIGER DRYLAC - 049/4540 - RAL2003	
HW-1	DOOR HARDWARE	G.C.	HARDWARE	ALL	SATIN NICKEL	SATIN

CEILINGS

Mark	Location	Supplier / Manuf.	Material	Specification	Color	Finish
ACOU-1	DINING ROOM CEILING	G.C. / USG INTERIORS	ACOUSTICAL TILE 24"X24"X5/8"	USG Radar ClimaPlus	ME 2220 SILVERTONE 052	SMOOTH
GRID-1	DINING GRID		15/16" EXPOSED GRID	DONN DXL	SILVERTONE 052	FLAT
ACOU-2	KITCHEN CEILING	G.C. / USG INTERIORS	GYPSUM LAY-IN 24"X48"X1/2" PANEL	SHEETROCK BRAND ClimaPlus VYNIL	3270 - WHITE	SMOOTH
GRID-2	KITCHEN GRID		15/16" DBL-WEB HOT DIPPED GALV. STEEL	DONN ZXLA (ENVIRONMENTAL)	WHITE	FLAT

SERVICE COUNTERS

Mark	Location	Supplier / Manuf.	Material	Specification	Color	Finish
SS-1	SERVICE COUNTERTOPS	LG HAUSYS AMERICA	HI-MAC	M551	CHIC CONCRETE	SMOOTH
WD-01	FRONT SERVICE COUNTER, METAL WALL QUEUE	SEATING CONCEPTS	WOOD FINISH	WHITE OAK RIFT CUT		BY VENDOR
WD-02	TOP CAP, END WALLS/CAP, BASE BOX, FRONT SERVICE COUNTER, CRUMB RAIL	SEATING CONCEPTS	WOOD FINISH	WHITE OAK RIFT CUT	SC: TEA WITH MILK	BY VENDOR
WD-03	BASE BOX, CRUMB RAIL, V-GROOVE, FRONT SERVICE COUNTER	SEATING CONCEPTS	WOOD FINISH	WHITE OAK RIFT CUT	SW WEATHERED TEAK	BY VENDOR

5 FINISH SCHEDULE

LIS EXPRESSLY RESERVES ITS COPYRIGHT AND ALL OTHER PROPERTY RIGHTS TO THESE DOCUMENTS AND THEIR DESIGN, HENCE, THEY ARE NOT TO BE REPRODUCED.

ARCHITECT / ENGINEER
LIS ARCHITECTURE ENGINEERING
LAND INVESTMENT SERVICES, LLC
21430 Palm Beach Blvd
Alva, FL 33920
Phone: (239) 693-9244
Facsimile: (239) 693-9828
2572 West State Road 426
Suite 2064, Oviedo, FL 32765
Phone: (321) 244-0402
Facsimile: (321) 244-9419

CLIENT NAME
SOUTHEASTERN RETAIL DEVELOPMENT, LLC
BLDG M-1, UNIT 231
2050 COUNTY ROAD 30A
SANTA ROSA BEACH, FL 32459

PROJECT NAME
POPEYES
PLK 1930-28-DL SAILORMEN
501 N HWY 49
BYRON, GA 31088

SHEET TITLE
FINISH PLAN & INTERIOR FINISH SCHEDULE

SEAL
HAROLD DANIEL HUTTER III
GEORGIA REG: RA015047

RELEASE		DATE
1	-	-
2		
3		
4		
5		
6		

PROJECT NO.
2020–085

ISSUE DATE
05/07/20

DRAWN: GM
CHECKED: HDH

SHEET NO.
A2
FLOOR FINISH PLAN & INTERIOR FINISH SCHEDULE

Order Plans @ WWW.LDIILine.com