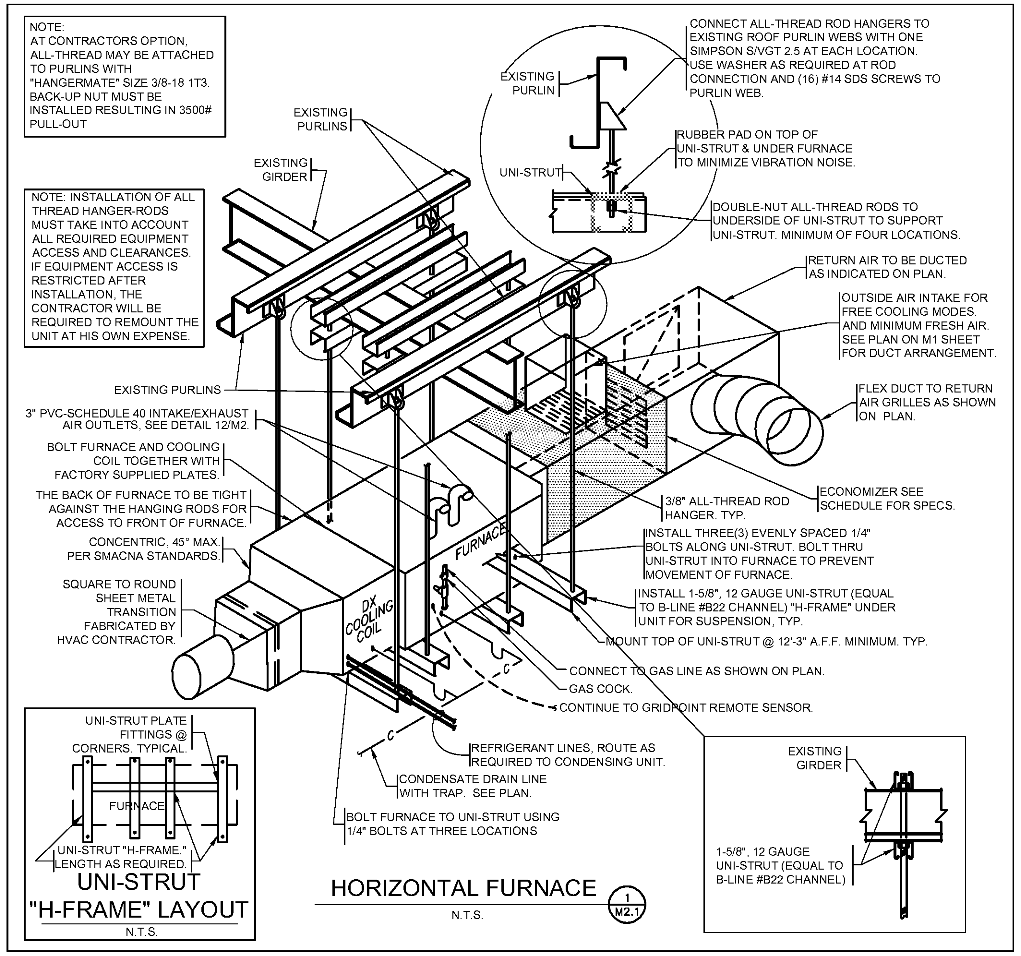

UNI-STRUT "H-FRAME" LAYOUT
N.T.S.

HORIZONTAL FURNACE (1/M2.1)
N.T.S.

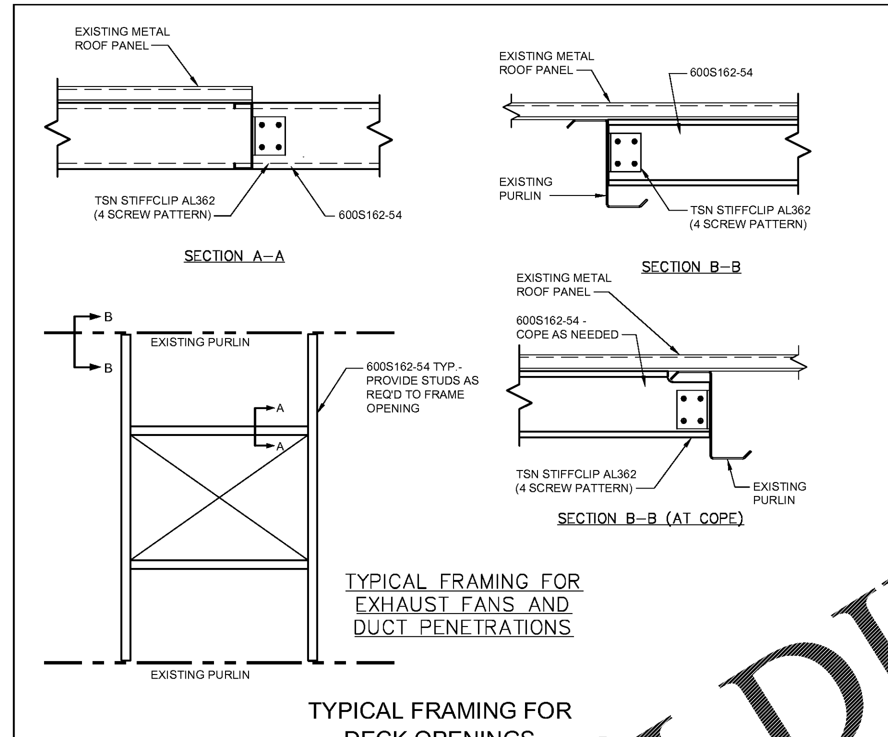

TYPICAL FRAMING FOR DECK OPENINGS (13/M2.1)
N.T.S.

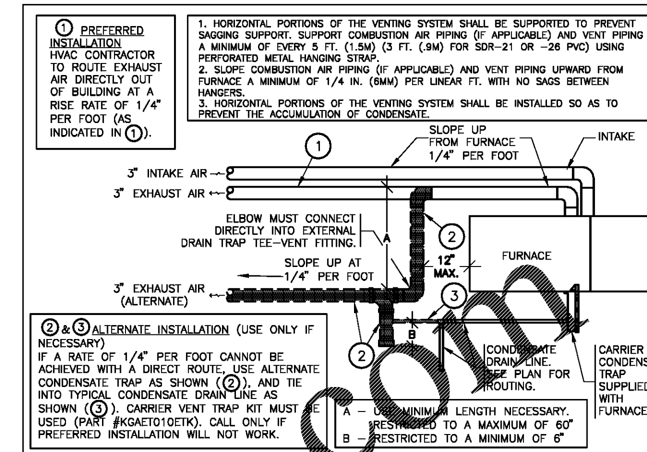

FURNACE EXHAUST VENT INSTALLATION (12/M2.1)
N.T.S.

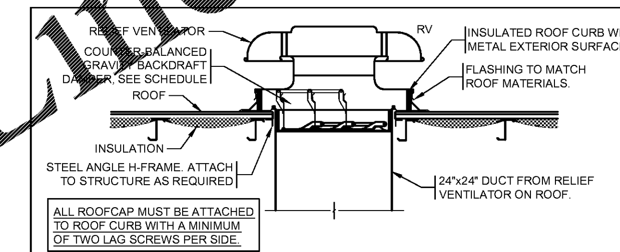

RELIEF VENTILATOR DETAIL (8/M2.1)
N.T.S.

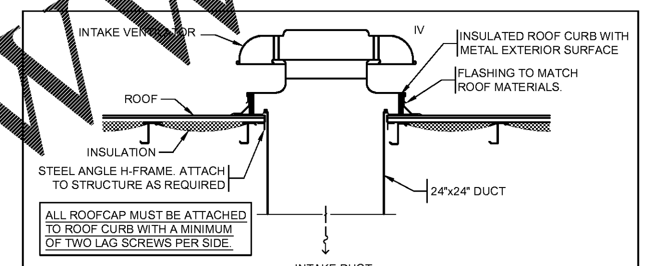

INTAKE VENTILATOR DETAIL (7/M2.1)
N.T.S.

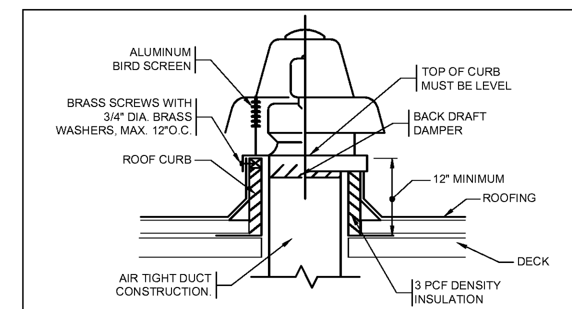

NOTES:
1. COORDINATE ALL ROOF PENETRATION REQUIREMENTS WITH LANDLORD'S ROOFING CONTRACTOR.
2. CONTRACTOR SHALL PROVIDE TIE-DOWNS, AS REQUIRED. COORDINATE REQUIREMENTS WITH LOCAL AUTHORITY HAVING JURISDICTION.

ROOF MOUNTED EXHAUST FAN DETAIL (6/M2.1)
N.T.S.

SEISMIC RESTRAINT REQUIREMENTS FOR NON-STRUCTURAL COMPONENTS

ALL EQUIPMENT, DUCTWORK AND PIPING SHALL BE PROVIDED WITH SEISMIC RESTRAINTS IN ACCORDANCE SEISMIC DESIGN CATEGORY "E" OF THE SEISMIC RESTRAINT MANUAL - GUIDANCE FOR MECHANICAL SYSTEMS, LATEST EDITION, AS PUBLISHED BY THE SHEET METAL AND AIR CONDITIONING CONTRACTORS' NATIONAL ASSOCIATION, INC. (SMACNA) AND ALL LOCAL CODES/AMENDMENTS.

EXCEPTIONS:
SEISMIC RESTRAINTS SHALL NOT BE REQUIRED FOR THE FOLLOWING INSTALLATIONS (ASCE 7-10, 13.6.7):

1. ALL DUCTS AND PIPING SUSPENDED BY HANGERS 12" OR LESS IN LENGTH FROM THE TOP OF THE DUCT TO THE BOTTOM OF THE SUPPORT FOR THE HANGER.
2. ALL DUCTS WITH A CROSS SECTIONAL AREA OF 6 SQUARE FEET OR LESS.

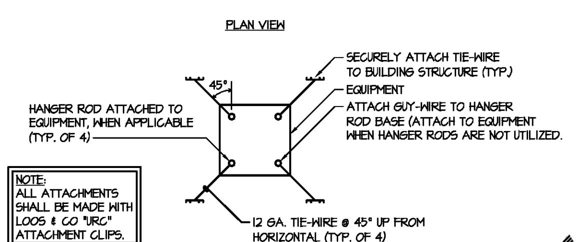

NOTE:
ALL ATTACHMENTS SHALL BE MADE WITH LOOS & CO "URC" ATTACHMENT CLIPS.

LATERAL RESTRAINT REQUIREMENTS FOR EQUIPMENT

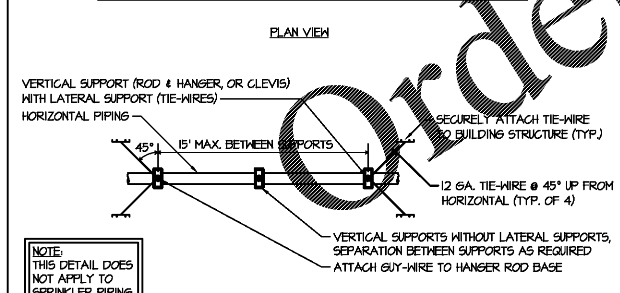

NOTE:
THIS DETAIL DOES NOT APPLY TO SPRINKLER PIPING.

LATERAL RESTRAINT REQUIREMENTS FOR PIPING

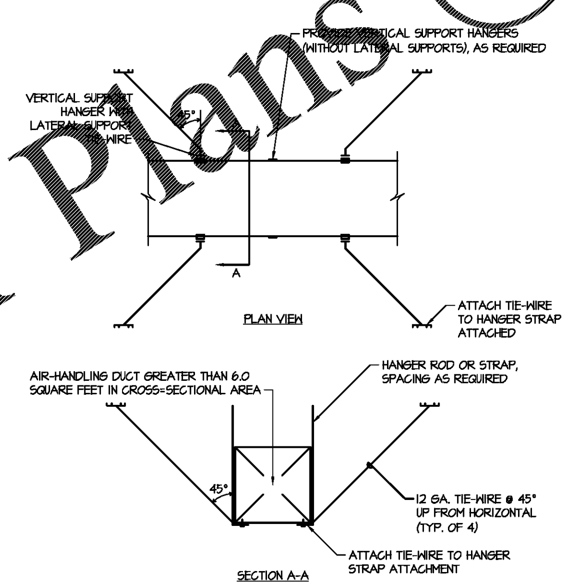

LATERAL RESTRAINT REQUIREMENTS FOR DUCTWORK

LATERAL SEISMIC RESTRAINT REQUIREMENTS (14/M2.1)
N.T.S.

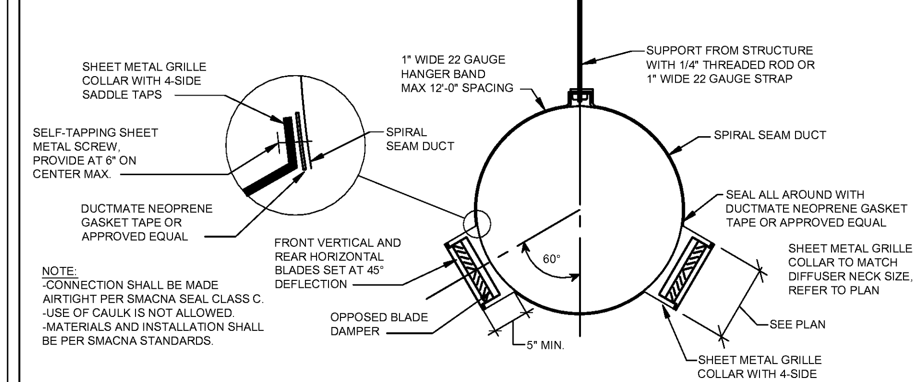

NOTE:
-CONNECTION SHALL BE MADE AIRTIGHT PER SMACNA SEAL CLASS C.
-USE OF CAULK IS NOT ALLOWED.
-MATERIALS AND INSTALLATION SHALL BE PER SMACNA STANDARDS.

DUCT MOUNTED DIFFUSER (15/M2.1)
N.T.S.

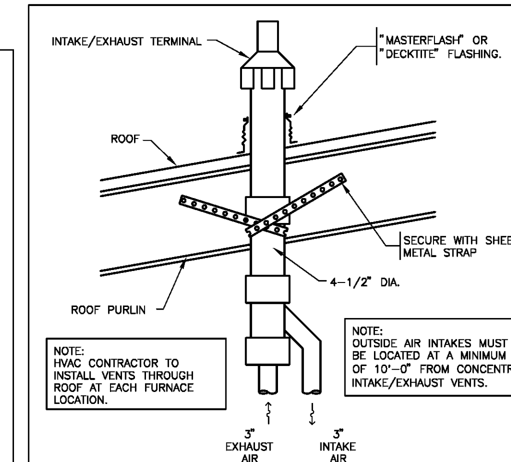

NOTE:
HVAC CONTRACTOR TO INSTALL VENTS THROUGH ROOF AT EACH FURNACE LOCATION.

NOTE:
OUTSIDE AIR INTAKES MUST BE LOCATED AT A MINIMUM OF 10'–0" FROM CONCENTRIC INTAKE/EXHAUST VENTS.

CONCENTRIC INTAKE/EXHAUST VENT (9/M2.1)
N.T.S.

Order Plans @ WWW.LDILine.com

O'Reilly AUTO PARTS
CORPORATE OFFICES, 233 SOUTH PATTERSON
SPRINGFIELD, MISSOURI 65802, PHONE: 417-862-2674

CASCO
12 Sunnen Drive, Suite 100, St. Louis, MO 63143 T: 314.821.1100
CASCO DIVERSIFIED CORPORATION LIC. # 2926 CODE 1205

COPYRIGHT 2018 - DESIGNS, DRAWINGS AND SPECIFICATIONS ARE INSTRUMENTS OF SERVICE AND ARE THE PROPERTY OF THE DESIGN PROFESSIONAL. REPRODUCTION PROHIBITED WITHOUT THE EXPRESSED WRITTEN CONSENT OF THE DESIGN PROFESSIONAL.

PROJECT:
EXPANSION O'REILLY AUTO PARTS STORE
493 CRAIGHEAD STREET
NASHVILLE, TN 37204

HVAC DETAILS

REVISIONS

NO.	DESCRIPTION	DATE

MICHAEL C. GRAPPERHAUS REGISTERED ENGINEER AGRICULTURE COMMERCE No. 120854 STATE OF TENNESSEE
4/23/20
Michael C. Grapperhaus
License #120854
Exp. Date: 11/30/21
Professional of Record

DRAWN:	MAK
CHECKED:	MCG
DATE:	04-22-2020
JOB NO.:	120237 (NV3)
SHEET:	M2.1