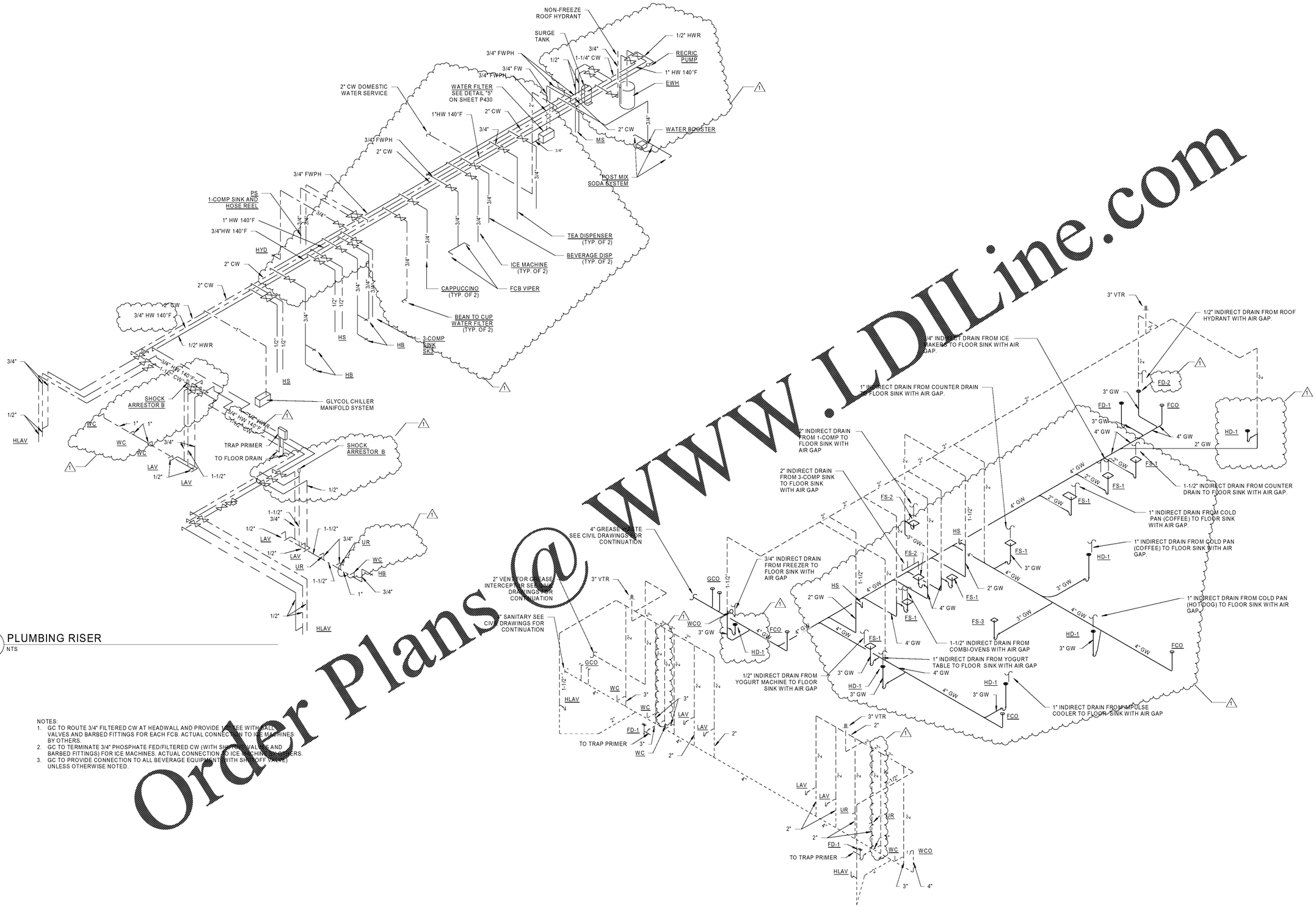

2 PLUMBING RISER
NTS

1 PLUMBING ISOMETRIC
NTS

NOTES:
1. GC TO ROUTE 3/4" FILTERED CW AT HEADWALL AND PROVIDE TEE WITH BALL VALVES AND BARBED FITTINGS FOR EACH FCB. ACTUAL CONNECTION TO ICE MACHINES BY OTHERS.
2. GC TO TERMINATE 3/4" PHOSPHATE FED/FILTERED CW (WITH SHUTOFF VALVES AND BARBED FITTINGS) FOR ICE MACHINES. ACTUAL CONNECTION TO ICE MACHINE BY OTHERS.
3. GC TO PROVIDE CONNECTION TO ALL BEVERAGE EQUIPMENT (WITH SHUTOFF VALVE) UNLESS OTHERWISE NOTED.

Order Plans @ www.LDILine.com

RaceTrac®
COPYRIGHT NOTICE
THESE PLANS ARE SUBJECT TO FEDERAL COPYRIGHT LAWS: ANY USE OF SAME WITHOUT THE EXPRESSED WRITTEN PERMISSION OF RACETRAC PETROLEUM, INC. IS PROHIBITED. 2016 RACETRAC PETROLEUM INC.

DESIGN PROFESSIONALS

GPD GROUP
Professional Corporation
520 S. MAIN STREET, STE 2531
AKRON, OH 44311

ISSUE/REVISION RECORD

DATE	DESCRIPTION
01/25/19	PERMIT SET
03/16/20	REFRESH TO 2020.0113

RaceTrac®
RACETRAC PETROLEUM, INC.
200 GALLERIA PARKWAY SOUTHEAST
SUITE 900
ATLANTA, GEORGIA 30339
(770) 431-7600

PROJECT NAME
HWY 316 @ 81

BETHLEHEM
GA 30620
839 LOGANVILLE HWY

RACETRAC STORE NUMBER
#1304

PROTOTYPE SERIES 5.5K 2.0
2018 LH MO 0405

PLAN MODIFICATION NOTICE
SPB NO. 0405 DATE 12/18/18

STANDARD PLAN BULLETINS (SPB) MODIFY THE PROTOTYPE SERIES SET NOTED ABOVE. THE LISTED SPB REPRESENTS THE LATEST MODIFICATION INCORPORATED TO THIS PROTOTYPE SERIES SET AT ORIGINAL RELEASE. THE ISSUE/ REVISION RECORD COLUMN ABOVE LISTS ANY REVISIONS OR SPB INCORPORATED IN THIS SET AFTER THE ORIGINAL RELEASE. CONTACT RACETRAC ENGINEERING AND CONSTRUCTION FOR ANY SUBSEQUENT BULLETINS NOT INCORPORATED HEREIN.

PROFESSIONAL SEAL

PROJECT NUMBER
2018157.19

SHEET TITLE
PLUMBING ISOMETRICS

SHEET NUMBER
P410