Order Plans @ WWW.DPLine.com

WALL MOUNT UNIT SCHEDULE

MARK	NOM. TONS	SERVES	COOLING ① MBH TOT	MBH SEN	E.A.T. DB°F	E.A.T. WB°F	SEER/EER	GAS HEATING INPUT MBH	GAS HEATING OUTPUT MBH	SUPPLY AIR FAN CFM	SUPPLY AIR FAN E.S.P. IN.WC.	MINIMUM OCCUPIED OA CFM	BASIS OF DESIGN BARD
WMU-1	3	CLASSROOM A102A	34.0	26.0	80	67	14.0/11.5	68	55	1100	0.15	235	W36G4D ②
WMU-2	3	CLASSROOM A104A	34.0	26.0	80	67	14.0/11.5	68	55	1100	0.15	235	W36G4D ②
WMU-3	2-1/2	WORKROOM A110A	28.0	20.9	80	67	14.0/11.5	68	55	1100	0.15	75	W30G4D ②
WMU-4	3	CLASSROOM A112A	34.0	26.0	80	67	14.0/11.5	68	55	1100	0.15	235	W36G4D ②
WMU-5	2	CLASSROOM A114A	24.0	18.3	80	67	14.0/11.5	68	55	1100	0.15	120	W24G4D ②
WMU-6	2	CLASSROOM A114A	24.0	18.3	80	67	14.0/11.5	68	55	1100	0.15	120	W24G4D ②
WMU-7	2	CLASSROOM A115A	24.0	18.3	80	67	14.0/11.5	68	55	1100	0.15	120	W24G4D ②
WMU-8	2	CLASSROOM A115A	24.0	18.3	80	67	14.0/11.5	68	55	1100	0.15	120	W24G4D ②
WMU-9	3	CLASSROOM A124A	34.0	26.0	80	67	14.0/11.5	68	55	1100	0.15	235	W36G4D ②
WMU-10	3	CLASSROOM A126A	34.0	26.0	80	67	14.0/11.5	68	55	1100	0.15	235	W36G4D ②
WMU-11	3	CLASSROOM A121A	34.0	26.0	80	67	14.0/11.5	68	55	1100	0.15	235	W36G4D ②
WMU-12	3	CLASSROOM A119A	34.0	26.0	80	67	14.0/11.5	68	55	1100	0.15	235	W36G4D ②
WMU-13	3	CLASSROOM A117A	34.0	26.0	80	67	14.0/11.5	68	55	1100	0.15	235	W36G4D ②

① REQUIRED COOLING UNIT CAPACITIES ARE AT 95°F DB AMBIENT OAT.

② PROVIDE (1) ION GENERATORS EQUAL TO GLOBAL PLASMA SOLUTIONS GPS-FC-3 MOUNTED IN FAN SECTION OF ROOFTOP UNIT.

PACKAGED GAS/ELECTRIC ROOFTOP UNIT SCHEDULE

MARK	NOM. TONS	SERVES	COOLING ① MBH TOT	MBH SEN	E.A.T. DB°F	E.A.T. WB°F	SEER/EER	GAS HEATING INPUT MBH	GAS HEATING OUTPUT MBH	SUPPLY AIR FAN CFM	SUPPLY AIR FAN E.S.P. IN.WC.	MINIMUM OCCUPIED OA CFM	BASIS OF DESIGN TRANE
RTU-1	6	CORRIDOR A100B,C,D	67.0	54.7	80	67	-/13.1	80	64	2450	1.0	400	YHC074 ②③
RTU-2	3	CLASSROOM A116A	32.0	20.1	80	67	15.0/12.7	60	48	1100	0.8	235	YHC036 ②
RTU-3	3	CLASSROOM A123A	32.0	20.1	80	67	15.0/12.7	60	48	1100	0.8	235	YHC036 ②
RTU-4	3	CLASSROOM A122A	32.5	20.7	80	67	15.0/12.7	60	48	1100	0.8	235	YHC036 ②
RTU-5	3	CLASSROOM A118A	32.0	20.1	80	67	15.0/12.7	60	48	1100	0.8	235	YHC036 ②
RTU-6	3	CLASSROOM A125A	32.0	20.1	80	67	15.0/12.7	60	48	1100	0.8	235	YHC036 ②
RTU-7	3	CLASSROOM A120A	33.2	21.2	80	67	15.0/12.7	60	48	1100	0.8	235	YHC036 ②
RTU-8	3	CLASSROOM A127A	33.2	21.2	80	67	15.0/12.7	60	48	1100	0.8	235	YHC036 ②

① REQUIRED COOLING UNIT CAPACITIES ARE AT 95°F DB AMBIENT OAT.

② PROVIDE (1) ION GENERATORS EQUAL TO GLOBAL PLASMA SOLUTIONS GPS-FC-3 MOUNTED IN FAN SECTION OF ROOFTOP UNIT.

③ INSTALL DUCT MOUNTED SMOKE DETECTOR (PROVIDED BY DIV. 26) IN S.A. DUCT.

DUCTLESS SPLIT-SYSTEM HEAT PUMP SCHEDULE

MARK	NOM. TONS	COOLING * SEER	MBH SEN	MBH TOT	EAT DB	EAT WB	HEATING ** REV. CYCLE MBH	HSPF	INDOOR UNIT CFM	OA	TYPE	BASIS FOR DESIGN DAIKIN INDOOR	OUTDOOR	SPACE SERVED
① HP/AC-1	1-1/2	18.6	15.0	18.0	80	67	20.0	10.1	600	60	CLG. CASSETTE	FCQ18TAVJU	RZQ18TAVJU	CONF. IN EXISTING BLDG.
① HP/AC-2	3/4	20.9	6.2	8.4	75.0	62.5	10.0	11.7	250	25	CLG. CASSETTE	FFQ09Q2VJU	RX09RMVJU	OFFICE A113A

* REQUIRED COOLING - UNIT CAPACITIES ARE AT 95°F DB AMBIENT OAT.

** REVERSE CYCLE HEATING & COP IS AT AHRI HIGH TEMPERATURE.

① PROVIDE ONE GLOBAL PLASMA SOLUTIONS GPS-FC BI-POLAR IONIZATION UNIT. UNIT SHALL BE MOUNTED AT THE FAN INLET AND POWERED FROM THE FCU'S POWER BOARD.

FAN SCHEDULE

MARK	FAN DATA CFM	E.S.P. IN.WC.	MAX SONES	HP	RPM	DRIVE	SERVES	FAN TYPE	CONTROL	BASIS OF DESIGN GREENHECK (U.N.O.)
F-TE-1	860	0.25"	9.4	1/4	1338	DIRECT	BOYS AND GIRLS A106A & A108A	CENTRIFUGAL ROOF EXHAUST	CORRIDOR LIGHTING	G-099-A
F-TE-2	70	0.25"	2.8	1/60	1384	DIRECT	RESTROOM A110B	CENTRIFUGAL ROOF EXHAUST	ROOM LIGHTING	G-060-D
F-JAN-1	75	0.25"	2.9	1/60	1402	DIRECT	JANITOR A107A	CENTRIFUGAL ROOF EXHAUST	CORRIDOR LIGHTING	G-060-D

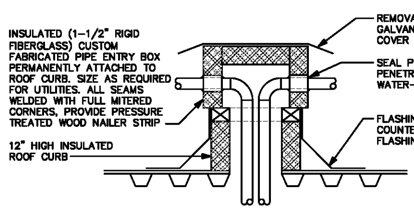

SIDE ENTRY ROOF PIPE CURB DETAIL

NO SCALE

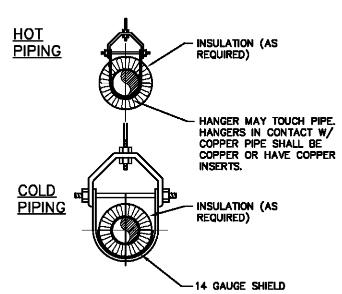

NOTES:
1. VAPOR BARRIER TO BE CONTINUOUS AT ALL JOINTS.
2. DETAIL SIMILAR FOR PIPES SUPPORTED FROM WALLS.

INSULATED PIPING PROTECTION DETAILS

NO SCALE

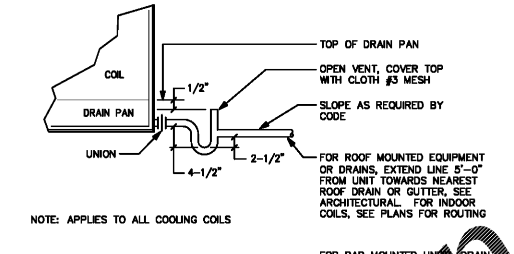

NOTE: APPLIES TO ALL COOLING COILS

FOR PAD MOUNTED UNITS, DRAIN SHALL BE A MINIMUM OF 6" ABOVE CONCRETE PAD.

CONDENSATE DRAIN TRAP DETAIL

NO SCALE

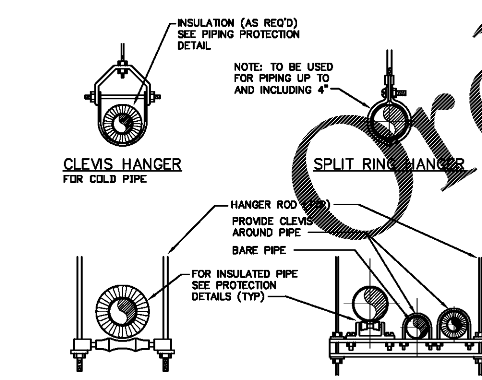

PIPING SUPPORT DETAILS

NO SCALE

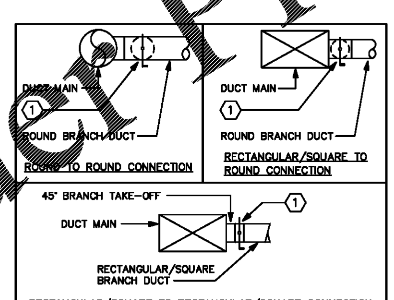

① FOR ACCESSIBLE CEILINGS (LAY-IN OR ACCESS DOOR PROVIDED): PROVIDE MANUAL DAMPER WITH LOCKING QUADRANT WITH 2" STAND-OFF BRACKET. PROVIDE NO AIR SCOOPS, AND MIN. 26 GAUGE CONSTRUCTION.

FOR INACCESSIBLE CEILINGS (GYPBOARD): PROVIDE YOUNG REGULATOR 5020-CC ROUND VOLUME CONTROL DAMPER (830A-CC FOR RECTANGULAR) WITH 270-896C BOWDEN CABLE CONTROL KIT. FOR DAMPERS ASSOCIATED WITH LINEAR SLOT DIFFUSERS, SEE DETAIL THIS SHEET. GROUP REGULATORS ONLY ABOVE LAY-IN CEILINGS. DO NOT INSTALL IN GYP CEILING UNLESS SPECIFICALLY DIRECTED SO BY THE ARCHITECT.

DETAIL APPLIES TO SUPPLY, RETURN, EXHAUST AND OUTSIDE AIR SYSTEMS, AS APPLICABLE.

BRANCH DUCT CONNECTION DETAIL

NO SCALE

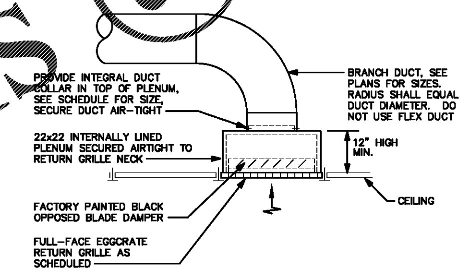

TYPICAL DUCTED RETURN/EXHAUST CONNECTION DETAIL

NO SCALE

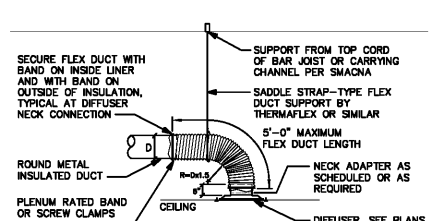

NOTES:

D = DIFFUSER NECK SIZE (IN INCHES) AS SCHEDULED.

TYPICAL INSTALLATION, UNLESS SHOWN OTHERWISE ON THE PLANS.

TYPICAL DIFFUSER CONNECTION DETAIL

NO SCALE

DIFFUSERS, REGISTERS, AND GRILLES

MARK	NECK SIZE	DESCRIPTION
S-1A	6"ø	SQUARE STEEL 4-CONE CEILING SUPPLY AIR DIFFUSER • 24x24 UNIFORM MODULE/FACE SIZE - FACTORY INSULATED. • INTEGRAL ROUND NECK SIZE AS SCHEDULED. • FIXED 4-WAY DISCHARGE AIR PATTERN. • COORDINATE BORDER AND FRAME WITH CEILING TYPE (LAY-IN TYPE 31 FULL FACE OR GYPBOARD TYPE 31 FULL FACE). • PRICE SERIES SCD OR APPROVED PRODUCT.
S-1B	8"ø	
S-1C	10"ø	
S-1D	12"ø	
S-1E	14"ø	
S-1F	15"ø	
MARK	NECK SIZE	SQUARE STEEL 4-CONE CEILING SUPPLY AIR DIFFUSER
S-2	6"ø	• 12x12 UNIFORM MODULE/FACE SIZE • INTEGRAL ROUND NECK SIZE AS SCHEDULED. • FIXED 4-WAY DISCHARGE AIR PATTERN. • COORDINATE BORDER AND FRAME WITH CEILING TYPE (LAY-IN TYPE 31 FULL FACE OR GYPBOARD TYPE 31 FULL FACE). • PRICE SERIES SCD OR APPROVED PRODUCT.
MARK	NECK SIZE	DOUBLE DEFLECTION STEEL SUPPLY AIR REGISTER
S-3	SIZE SHOWN ON DWGS	• 3/4" BLADE SPACING, FRONT BLADES PARALLEL TO SHORT DIMENSION. • SURFACE MOUNT BORDER AND FRAME (TYPE F, 1-1/4" STANDARD FLAT), WITH TYPE "C" CONCEALED FASTENING. • PRICE ACCESSORY INTEGRAL OPPOSED BLADE VOLUME CONTROL DAMPER. • PRICE SERIES 520D OR APPROVED PRODUCT.
MARK	NECK SIZE	EGGCRATE ALUMINUM CEILING RETURN AIR GRILLE
R-1A	10x22	• PROVIDE ALUMINUM LAY-IN OR SURFACE MOUNT BORDER AND FRAME AS REQUIRED FOR APPLICATION. • 1/2"x1/2"x1" (SINGLE CORE) HIGH ALUMINUM EGGCRATE CORE. • PROVIDE 12"X24" PANEL SIZE FOR R-1A; 24"x24" PANEL SIZE FOR R-1 • PROVIDE INTERNALLY-LINED, 12" HIGH SHEETMETAL PLENUM FOR DUCTED APPLICATIONS. • PRICE SERIES 81 OR APPROVED PRODUCT.
R-1	22x22	
MARK	NECK SIZE	ALUMINUM SIDEWALL RETURN AIR GRILLE
R-2	SIZE SHOWN ON DWGS	• 3/4" BLADE SPACING, 35° DEFLECTION, PARALLEL TO LONG/HORIZONTAL DIMENSION. • SURFACE-MOUNT ALUMINUM BORDER SHALL BE CONTINUOUSLY WELDED. • CORE BLADES SHALL BE HELD BY MANDREL TUBES NOT TO EXCEED 12" ON CENTER. • TITUS 350FL OR APPROVED PRODUCT.
MARK	NECK SIZE	ALUMINUM EGGCRATE FLUSH FACE CEILING EXHAUST REGISTER
E-1A	6x6	• 1/2"x1/2"x1"(SINGLE CORE) INTEGRAL ALUMINUM EGGCRATE CORE. • TYPE TB BORDER AND FRAME WITH EXPOSED PERIMETER FRAME FOR LAY-IN INSTALLATIONS. TYPE F, 1-1/4" STANDARD FLAT BORDER AND FRAME WITH TYPE "C" CONCEALED FASTENING FOR SURFACE MOUNT INSTALLATIONS. • PROVIDE ALUMINUM OPPOSED BLADE DAMPER. VCD AT TAKE-OFF MAY BE OMITTED WHERE INSTALLED IN GYP. CLGS. • PROVIDE 12" HIGH INTERNALLY LINED (1" LINER) SHEETMETAL PLENUM RIGIDLY CONNECTED TO GRILLE NECK (SIZE AS SCHEDULED), WITH DUCT CONNECTION (SIZE AS SCHEDULED) IN TOP OF PLENUM. PROVIDE TALLER PLENUM WITH SIDE CONNECTION AS REQUIRED BY SPACE CONSTRAINTS. • PRICE SERIES 81 DAL OR APPROVED PRODUCT.
E-1B	8x8	
E-1C	10x10	
E-1D	12x12	

NOTES:
1. PROVIDE ALUMINUM DEVICES (INCLUDING DAMPERS) FOR "WET" ROOMS (TOILETS, LOCKERS, SHOWERS, ETC.)
2. E=EXHAUST AIR; R=RETURN AIR; TA=TRANSFER AIR.
3. PROVIDE FULL-FACE DEVICES ONLY; PANEL-MOUNTED WILL NOT BE ACCEPTED FOR ANY DEVICES.
4. ALL DEVICES SHALL BE FACTORY PAINTED POWDER COAT B12 WHITE, U.N.O.
5. ALL OPPOSED BLADE DAMPERS SHALL BE FACTORY PAINTED BLACK.
6. ALL CEILING-MOUNTED SUPPLY DIFFUSERS SHALL BE 4-WAY (FIELD ADJUSTABLE) DISCHARGE, UNLESS NOTED OTHERWISE.
7. ALL DEVICES SPECIFIED AS ADJUSTABLE, SHALL BE ADJUSTABLE WITHOUT USING SPECIAL TOOLS.
8. SEE SPECIFICATIONS FOR ADDITIONAL REQUIREMENTS.

ELECTRIC HEATER SCHEDULE

MARK	TYPE	KW	NOTES	SERVES	BASIS OF DESIGN
ECH-1 THRU 4	ELECTRIC CLG. HEATER	4	RECESSED	ENTRANCES	MARKEL 3485
EUH-1	ELECTRIC UNIT HEATER	3.3	WALL MOUNTED	RISER A101A	MARKEL 5100

- PROVIDE UNIT-MOUNTED THERMOSTAT AND CIRCUIT BREAKER/DISCONNECT SWITCH FOR CEILING HEATERS.

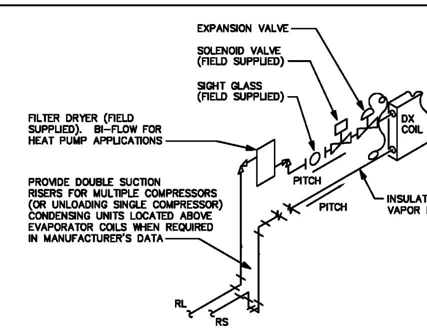

DX COIL CONNECTION DETAIL

NO SCALE

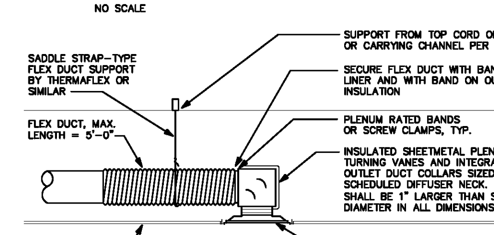

NOTE: INSTALLATION APPLIES ONLY WHERE INDICATED ON THE PLANS, OR AS REQUIRED BY LOW CLEARANCE CONDITIONS.

TYPICAL LOW CLEARANCE DIFFUSER CONNECTION DETAIL

NO SCALE

HVAC LEGEND **

HVAC DUCT SYMBOLS

DOUBLE LINE	SINGLE LINE	DESCRIPTION
12x6	12x6	DUCT (WIDTH x DEPTH)
		DUCT TURNED UP (SUPPLY OR DISCHARGE)
		DUCT TURNED DOWN (SUPPLY OR DISCHARGE)
		DUCT TURNED UP (RETURN OR EXHAUST)
		DUCT TURNED DOWN (RETURN OR EXHAUST)
R	R	RISE — IN DIRECTION OF AIR FLOW
D	D	DROP — IN DIRECTION OF AIR FLOW
SD	SD	SPLITTER DAMPER
		DUCT SIZE TRANSITION
		END OF DUCT RUN
		DUCT TURN WITH RADIUS ELBOW
		SQUARE TURN WITH VANE ELBOW
		LINED DUCTWORK
		FIRE DAMPER IN HORIZONTAL DUCT
		FIRE DAMPER IN VERTICAL DUCT
SMK	SMK	SMOKE DAMPER IN HORIZONTAL DUCT
		FLEXIBLE AIR DUCT
VCD	VCD	VOLUME CONTROL DAMPER
M	M	MOTOR OPERATED DAMPER
BDD	BDD	BACKDRAFT DAMPER
SD	SD	SMOKE DETECTOR IN HORIZONTAL DUCT
SD	SD	SMOKE DETECTOR IN VERTICAL DUCT
T	T	THERMOSTAT
H	H	HUMIDITY SENSOR
		AIR FLOW DIRECTION

S-1 / 250: MARK (SEE SCHEDULE); AIR DISTRIBUTION DEVICE; CFM (AIR FLOW)

PIPING SYMBOLS

SYMBOL	DESCRIPTION
	ELBOW UP
	ELBOW DOWN
	UNION
	END CAP
	THERMOMETER
	PRESSURE GAUGE
	GATE VALVE
	GLOBE VALVE
	BALL VALVE
	CHECK VALVE
	BUTTERFLY VALVE
	PLUG VALVE
	3-WAY CONTROL VALVE
	2-WAY CONTROL VALVE
	2-WAY SOLENOID VALVE
	BALANCING VALVE WITH MEMORY STOP
	RELIEF VALVE
	STRAINER
HWS	HEATING HOT WATER SUPPLY
HWR	HEATING HOT WATER RETURN
CHWS	CHILLED WATER SUPPLY
CHWR	CHILLED WATER RETURN
FS	FLOW SWITCH
	FLEXIBLE CONNECTION
AAV	AUTOMATIC AIR VENT
	TEMPERATURE SENSOR

ABBREVIATIONS	DESCRIPTION
IN.WC.	INCHES OF WATER COLUMN
CFM	CUBIC FEET PER MINUTE
OA	OUTSIDE AIR
SA	SUPPLY AIR
RA	RETURN AIR
TD	TRANSFER DUCT
A/C	ABOVE CEILING
AFF	ABOVE FINISHED FLOOR
TTS	TIGHT TO STRUCTURE
TYP	TYPICAL
CLG	CEILING
DWG	DRAWING
SPEC	SPECIFICATIONS
UNO	UNLESS NOTED OTHERWISE
D	CONDENSATE DRAIN
ESP	EXTERNAL STATIC PRESSURE
MBH	BTU per HOUR x 1000
DB	DRY BULB
WB	WET BULB
HP	HORSEPOWER, HEAT PUMP
KW	KILOWATT
VCD	VOLUME CONTROL DAMPER
INw	INTERLOCK WITH
FDL	FIRE-RATED DOOR LOUVER
FCU	FAN COIL UNIT
EUH	ELECTRIC UNIT HEATER
ECH	ELECTRIC CEILING HEATER
EWH	ELECTRIC WALL HEATER
ERV	ENERGY RECOVERY VENTILATOR
IJS	IN JOIST SPACE
TJW	THRU JOIST WEBS

** NOTE: ALL SYMBOLS/ABBREVIATIONS MAY NOT APPEAR ON DWGS.

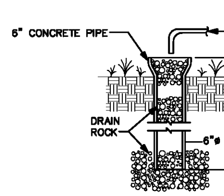

DRY WELL DETAIL

SCALE: NONE

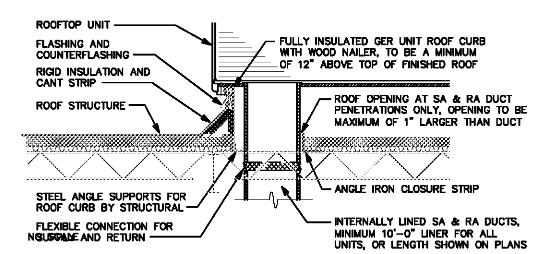

TYPICAL ROOFTOP UNIT INSTALLATION DETAIL

Breaux & Associates ARCHITECTS
5955 Shiloh Road East, Suite 200
Alpharetta, Georgia 30005 | (678) 585-4508

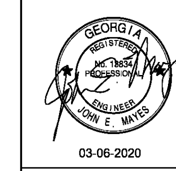

03-06-2020

BAA MECHANICAL ENGINEERS INC
500 Bishop Street Suite F-3 Atlanta, GA 30318
Ph: 404-355-0050 Fax: 404-355-1050

NO	DESCRIPTION	DATE

RUSSOM ELEMENTARY SCHOOL ADDITION

44 RUSSOM ELEMENTARY SCHOOL LANE

DALLAS, GA 30132

(FACILITY CODE: 710-0204)

PAULDING COUNTY SCHOOLS

HVAC LEGEND, SCHEDULES, AND DETAILS

DATE 03/06/2020

PROJECT NO. 19117

M0.1

104372 SF (EXISTING AREA) + 22878 SF (NEW AREA) = 127250 SF (TOTAL AREA); 850 F.T.E. (EXISTING) + 275 F.T.E. (NEW) = 1125 F.T.E. (TOTAL); 54 I.U. (EXISTING) + 17 I.U. (NEW) = 71 I.U. (TOTAL)

2/6/2020 2:27:52 PM