Sheet Template ID: OPE-F-07-B

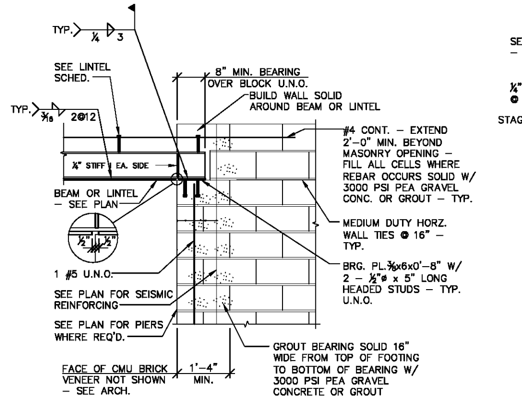

1 S2.02 **BEAM OR LINTEL BEARING DETAIL** SCALE: 3/4"=1'-0" TYP. U.N.O.

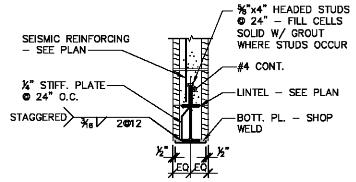

2 S2.02 **LINTEL** SCALE: 3/4"=1'-0"

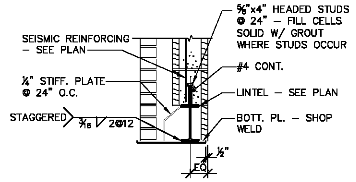

4 S2.02 **LINTEL** SCALE: 3/4"=1'-0"

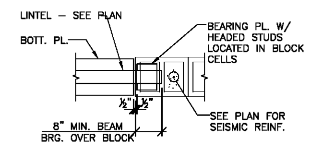

3 S2.02 **PLAN - SINGLE WYTHE MASONRY WALL** SCALE: 3/4"=1'-0"

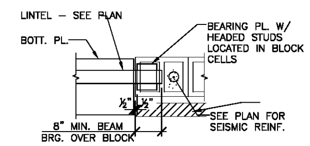

5 S2.02 **PLAN MASONRY CAVITY WALL W/ BRICK VENEER** SCALE: 3/4"=1'-0"

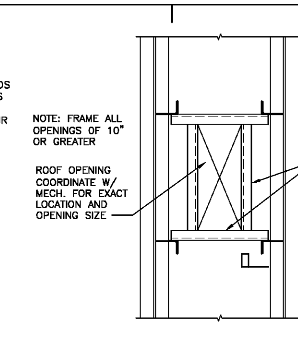

6 S2.02 **TYP. ROOF OPENING** NO SCALE

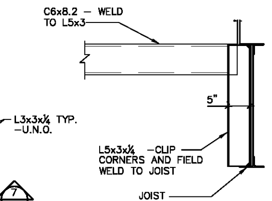

7 S2.02 **SECTION** SCALE: 1 1/2"=1'-0"

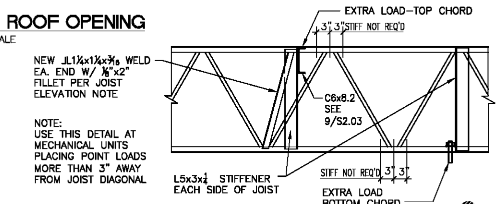

8 S2.02 **FRAMING FOR ADDITIONAL LOADING** SCALE: 3/4"=1'-0"

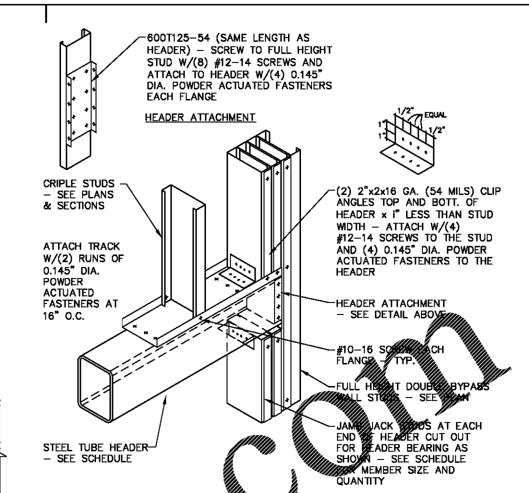

9 S2.02 **STEEL TUBE HEADER DETAIL** NO SCALE

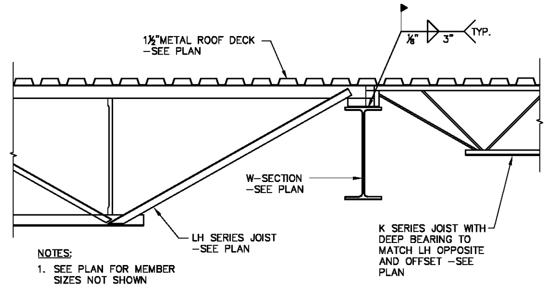

NOTES:
1. SEE PLAN FOR MEMBER SIZES NOT SHOWN
2. BEAR LH SERIES JOIST OVER CENTER OF W–SECTION
3. K–SERIES JOIST SHALL BE OFFSET OF LH JOIST AND HAVE 2 1/2" MIN. BEARING

10 S2.02 **JOIST BEARING DETAIL** 3/4"= 1'-0"

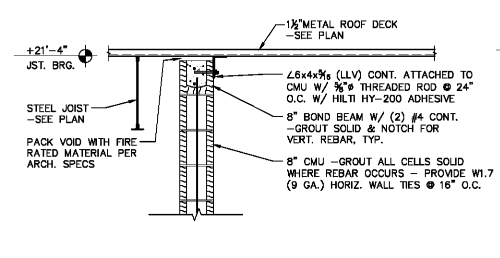

11 S2.02 **SECTION AT INTERIOR WALL** 3/4"= 1'-0"

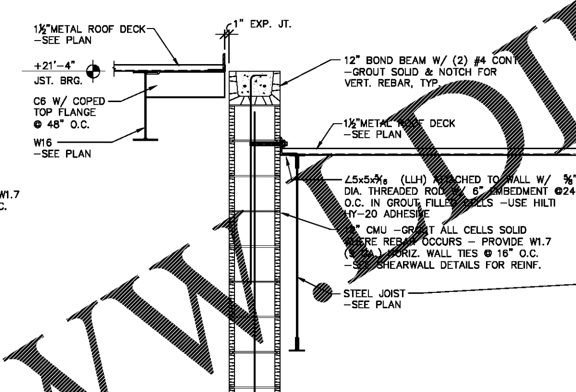

12 S2.02 **SECTION AT INTERIOR WALL** 3/4"= 1'-0"

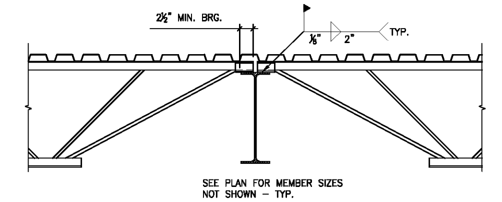

13 S2.02 **JOIST BEARING DETAIL** 3/4"= 1'-0"

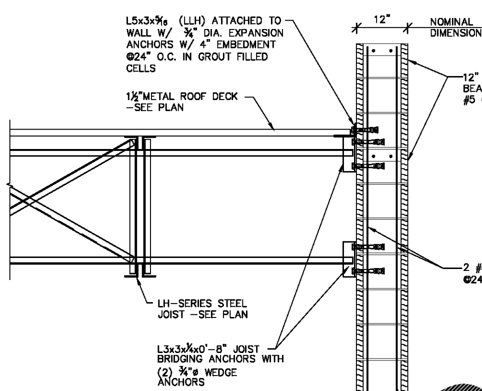

14 S2.02 **JOIST AND WALL DETAIL** 3/4"= 1'-0"

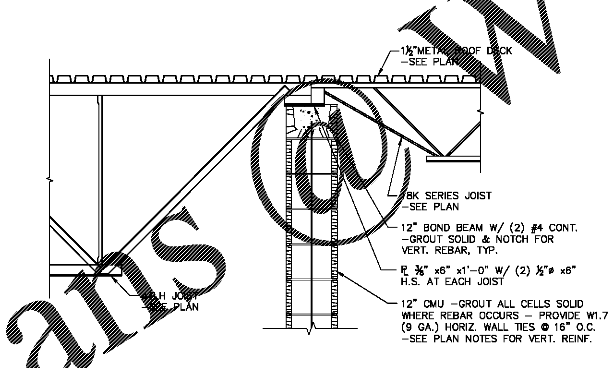

15 S2.02 **SECTION AT INTERIOR WALL** 3/4"= 1'-0"

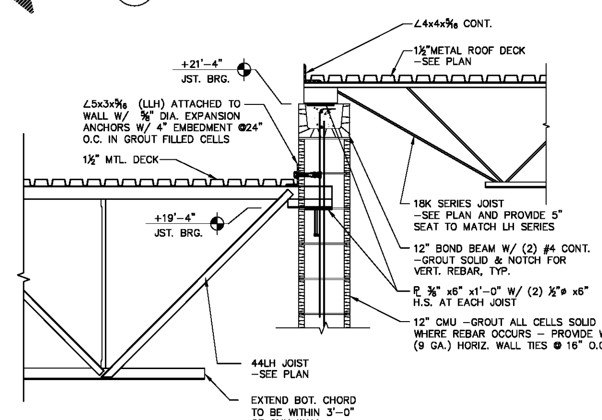

16 S2.02 **SECTION AT INTERIOR WALL** 3/4"= 1'-0"

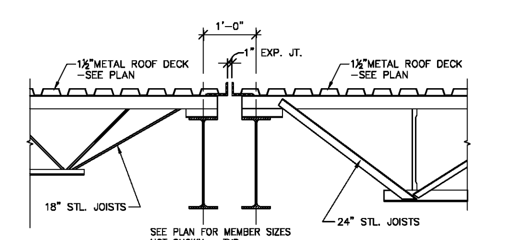

17 S2.02 **JOIST BEARING DETAIL** 3/4"= 1'-0"

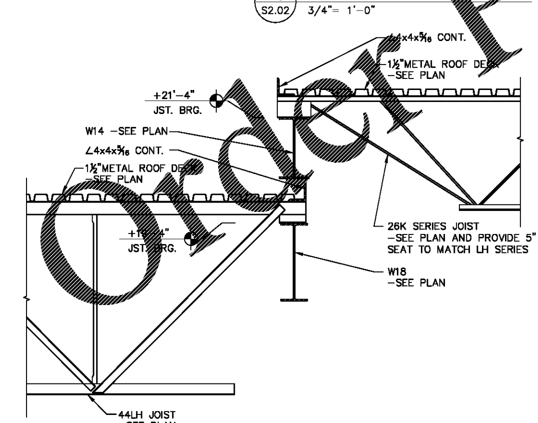

18 S2.02 **JOIST BEARING DETAIL** 3/4"= 1'-0"

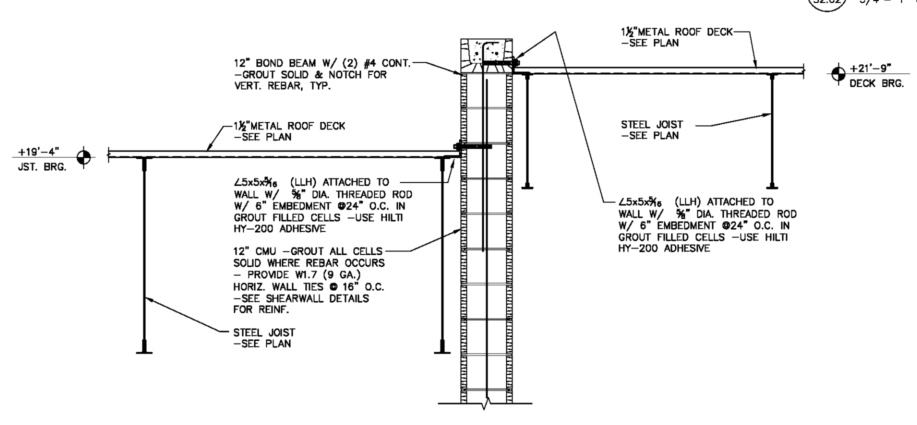

19 S2.02 **SECTION AT INTERIOR WALL** 3/4"= 1'-0"

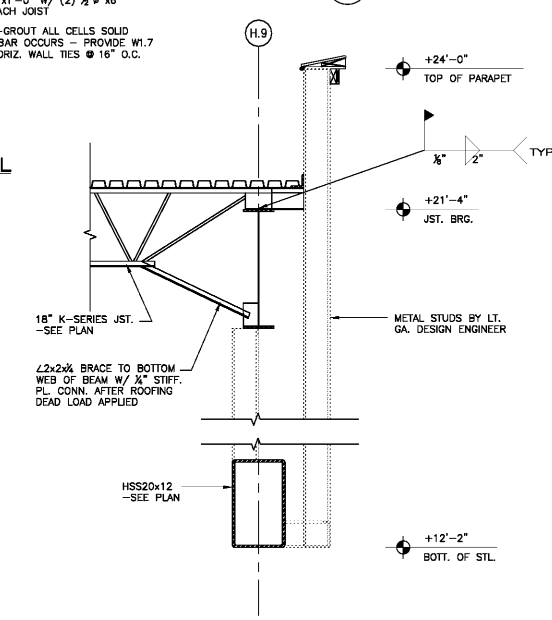

20 S2.02 **SECTION** 3/4"= 1'-0"

Order Plans @ WWW.DILine.com

FD | INTEGRA
an Integra Architecture, PLLC DBA
118 East Kingston Avenue, Ste. 20
Charlotte, NC 28203
704.372.0001
www.fdintegra.com

THE DRAWINGS & WRITTEN MATERIAL HEREIN CONSTITUTE ORIGINAL WORK OF THE ARCHITECT, & AS INTELLECTUAL PROPERTY & INSTRUMENTS OF SERVICE, ARE SUBJECT TO COPYRIGHT & MAY NOT BE MODIFIED, PUBLISHED DISTRIBUTED, REPRODUCED OR USED IN ANY WAY WITHOUT EXPRESS WRITTEN CONSENT OF THE ARCHITECT
© FD| INTEGRA

SMILEY ENGINEERING, INC.
NC License No. C-3128
1171 Market Street, Suite 203
Fort Mill, SC 29708
704-408-1698

Seals: NORTH CAROLINA PROFESSIONAL ENGINEER SEAL 24312 TOM N. SMILEY 03/04/20

HYUNDAI
HYUNDAI OF SOUTH CHARLOTTE

Revisions:

Number	Date	Description

Project Title:
HYUNDAI
SOUTH CHARLOTTE

10518 CADILLAC STREET
PINEVILLE, NC 28134

Project No.: 2536.00

Drawing Title:
ROOF FRAMING SECTIONS & DETAILS

SET ISSUE DATE
MARCH 4, 2020
100% CD

Sheet: **S2.02**

File: X:\Smiley Engineering\Smiley Engr 2019\F&D – Integra 2019\Hyundia Redesign of 2017 Plans\struct\Section–Hyundai Pineville; Plotted: 3/4/2020 4:51 PM by CONOR; Saved: 3/4/2020 4:48 PM by CONOR