Sheet Template ID: OPE-F-07-B

HARDWARE SETS

DOOR HARDWARE SET NO. 1
1 LATCHING DEVICE PASSAGE TYPE (ANSI F75)

DOOR HARDWARE SET NO. 2
1 LATCHING DEVICE PRIVACY TYPE (ANSI F76)

DOOR HARDWARE SET NO. 3
1 LATCHING DEVICE ENTRANCE/OFFICE TYPE (ANSI F81)

DOOR HARDWARE SET NO. 4
1 LATCHING DEVICE STOREROOM TYPE (ANSI F86)

DOOR HARDWARE SET NO. 5
1 PUSH/PULL PLATES

DOOR HARDWARE SET NO. 6
1 PULL
1 THUMBTURN INTERIOR / KEYED EXTERIOR DEADBOLT

DOOR HARDWARE SET NO. 7
2 PULL
1 THUMBTURN INTERIOR / KEYED EXTERIOR DEADBOLT
1 FLUSH BOLTS

DOOR HARDWARE SET NO. 8
1 LATCHING DEVICE STOREROOM TYPE (ANSI F86)
1 FLUSH BOLTS

DOOR HARDWARE SET NO. 9
1 LATCHING DEVICE KEYPAD LOCK

DOOR HARDWARE SET NO. 10
1 DIGITAL KEYPAD

DOOR HARDWARE SET NO. 11
1 PANIC DEVICE
1 VERTICAL ROD

DOOR HARDWARE SET NO. 12
2 PANIC DEVICE
2 VERTICAL ROD
2 STOREROOM TYPE (ANSI F86)

SUFFIXES:
A - ADD WALL STOP
B - ADD FLOOR STOP
C - ADD CLOSER
D - ADD DOOR SWEEP

NOTES:
1. ALL HARDWARE SHALL MEET NORTH CAROLINA ACCESSIBILITY REQUIREMENTS.
2. REFER TO SPECIFICATIONS FOR ROLL-UP AND SECTIONAL DOOR HARDWARE.

GLASS TYPES

TAG	DESCRIPTION
G1	1/4" THICK CLEAR FULLY TEMPERED SAFETY GLASS
G2	1" THICK CLEAR INSULATED GLAZING W/ LOW-E COATING, PROVIDE FULLY TEMPERED UNITS AS REQ'D BY CODE
G3	3/8" THICK CLEAR FULLY TEMPERED SAFETY GLASS W/ CONT. CLEAR EZ-GLAZE 180° JOINT STRIPS AT ALL BUTT JOINTS
G4	1" THICK, INSULATED, FULLY OPAQUE SPANDREL GLASS

NOTES:
1. ALL GLAZING SHALL COMPLY WITH SECTION 2406 OF THE 2018 NCSBC AND/OR CORRESPONDING UL REQUIREMENTS.
2. BASIS OF DESIGN FOR INSULATED GLASS UNITS IS PPG SOLARBAN R100.

SIGNS

A - EXIT SIGN W/ BRAILLE
B - ACCESSIBLE TOILET W/ BRAILLE

SUFFIXES:
1 - MOUNT ON PUSH SIDE OF DOOR
2 - MOUNT ON PULL SIDE OF DOOR

NOTES:
1. ALL SIGNS SHALL MEET NORTH CAROLINA ACCESSIBILITY REQUIREMENTS.
2. REFER TO TYPICAL ACCESSIBLE MOUNTING DETAILS.

DOOR SCHEDULE

DOOR #	TYPE	SIZE	DOOR THICK.	DOOR ELEV.	DOOR MAT'L.	DOOR RATING	DOOR FINISH	FRAME ELEV.	FRAME MAT'L	FRAME RATING	FRAME FINISH	SET #	JAMB	SIGN	REMARKS
101A	ROLL-UP	12'0"x12'0"		D-15	ALUM.		ANOD-1	D-15					04/A6.4		SEE 01/A6.4 SILL
101B	ROLL-UP	12'0"x12'0"		D-15	ALUM.		ANOD-1	D-15					04/A6.4		SEE 01/A6.4 SILL
101C	EXTERIOR	3'0"x9'0"		D-2B	ALUM.		ANOD-1	SF-11	ALUM.		ANOD-1	6-C	18/A6.3 SIM	A-1	SEE 17/A6.3 SILL
101D	ROLL-UP	12'0"x12'0"		D-15	ALUM.		ANOD-1	D-15					04/A6.4		SEE 01/A6.4 SILL
101E	ROLL-UP	12'0"x12'0"		D-15	ALUM.		ANOD-1	D-15					04/A6.4		SEE 01/A6.4 SILL
101F	EXTERIOR	3'0"x9'0"		D-2B	ALUM.		ANOD-1	SF-11	ALUM.		ANOD-1	6-C	18/A6.3 SIM	A-1	SEE 17/A6.3 SILL
101G	INTERIOR	6'0"x9'0"		D-8	ALUM.		ANOD-1	SF-15	ALUM.		ANOD-1	7	08/A6.3*		*F.O. FRAME FLUSH W/ WALL
102A	INTERIOR	3'0"x9'0"		D-7	ALUM.		ANOD-1	SF-16	ALUM.		ANOD-1	6-A,C	08/A6.3*		*F.O. FRAME FLUSH W/ WALL
102B	INTERIOR	3'0"x9'0"		D-2B	ALUM.		ANOD-1	SF-13	ALUM.		ANOD-1	6-A,C	08/A6.3*		*F.O. FRAME FLUSH W/ WALL
103A	INTERIOR	3'0"x9'0"		D-7	ALUM.		ANOD-1	SF-17B	ALUM.		ANOD-1	6-A,C	08/A6.3*		*F.O. FRAME FLUSH W/ WALL
104A	INTERIOR	3'0"x9'0"		D-7	ALUM.		ANOD-1	SF-17B	ALUM.		ANOD-1	6-A,C	08/A6.3*		*F.O. FRAME FLUSH W/ WALL
105A	INTERIOR	3'0"x9'0"		D-7	ALUM.		ANOD-1	SF-17C	ALUM.		ANOD-1	6-A,C	08/A6.3*		*F.O. FRAME FLUSH W/ WALL
106A	INTERIOR	3'0"x9'0"		D-7	ALUM.		ANOD-1	SF-11	ALUM.		ANOD-1	6-A,C	08/A6.3*		*F.O. FRAME FLUSH W/ WALL
107A	INTERIOR	3'0"x9'0"		D-7	ALUM.		ANOD-1	SF-17	ALUM.		ANOD-1	6-A,C	08/A6.3*		*F.O. FRAME FLUSH W/ WALL
108A	EXTERIOR	3'0"x7'0"	1-3/4"	D-4A	MTL.		PAINT	F-1	MTL.		PAINT	11-C	18/A6.3		SEE 11/A6.3 SILL
109A	EXTERIOR	3'0"x7'0"	1-3/4"	D-4A	MTL.		PAINT	F-1	MTL.		PAINT	4-C	18/A6.3		SEE 11/A6.3 SILL
113A	INTERIOR	3'0"x8'0"	1-3/4"	D-1A	LAMIN.		LAM-1	SF-10	ALUM.		ANOD-1	3-C, 10	08/A6.3		
113B	ROLLING GRL	7'10"x8'0"		D-23	ALUM.		ANOD-1	D-23							
114A	INTERIOR	3'0"x8'0"	1-3/4"	D-1A	LAMIN.		LAM-1	SF-10	ALUM.		ANOD-1	3-A	08/A6.3		
116A	---NOT USED---														
117A	INTERIOR	3'0"x8'0"	1-3/4"	D-1B	LAMIN.		LAM-1	SF-10	ALUM.		ANOD-1	1-B	08/A6.3		
118A	INTERIOR	3'0"x8'0"	1-3/4"	D-1A	LAMIN.		LAM-1	SF-10	ALUM.		ANOD-1	5-C	08/A6.3	B-1	
119A	INTERIOR	3'0"x8'0"	1-3/4"	D-1A	LAMIN.		LAM-1	SF-10	ALUM.		ANOD-1	5-C	08/A6.3	B-1	
120A	INTERIOR	3'0"x8'0"	1-3/4"	D-1A	LAMIN.		LAM-1	SF-10	ALUM.		ANOD-1	1-C, 10	08/A6.3		
121A	INTERIOR	3'0"x8'0"	1-3/4"	D-1A	LAMIN.		LAM-1	SF-10	ALUM.		ANOD-1	4-A	08/A6.3		
123A	INTERIOR	3'0"x8'0"	1-3/4"	D-1A	LAMIN.		LAM-1	SF-10	ALUM.		ANOD-1	4-B	08/A6.3		
126A	INTERIOR	3'0"x8'0"		D-2	ALUM.		ANOD-1	SF-18C	ALUM.		ANOD-1	6-A,C	08/A6.3*		*F.O. FRAME FLUSH W/ WALL
127A	INTERIOR	3'0"x8'0"		D-2	ALUM.		ANOD-1	SF-18C	ALUM.		ANOD-1	6-A,C	08/A6.3*		*F.O. FRAME FLUSH W/ WALL
128A	INTERIOR	3'0"x8'0"		D-2	ALUM.		ANOD-1	SF-25	ALUM.		ANOD-1	6-A,C	08/A6.3*		*F.O. FRAME FLUSH W/ WALL
128B	INTERIOR	3'0"x8'0"		D-2	ALUM.		ANOD-1	SF-25	ALUM.		ANOD-1	6-A,C	08/A6.3*		*F.O. FRAME FLUSH W/ WALL
128C	INTERIOR	3'0"x8'0"		D-2	ALUM.		ANOD-1	SF-31	ALUM.		ANOD-1	6-A,C, 10	08/A6.3*		*F.O. FRAME FLUSH W/ WALL
129A	INTERIOR	3'0"x8'0"		D-2	ALUM.		ANOD-1	SF-18D	ALUM.		ANOD-1	6-A,C	08/A6.3*		*F.O. FRAME FLUSH W/ WALL
130A	INTERIOR	3'0"x8'0"		D-2	ALUM.		ANOD-1	SF-18D	ALUM.		ANOD-1	6-A,C	08/A6.3*		*F.O. FRAME FLUSH W/ WALL
131A	INTERIOR	3'0"x8'0"		D-2	ALUM.		ANOD-1	SF-18E	ALUM.		ANOD-1	6-A,C	08/A6.3*		*F.O. FRAME FLUSH W/ WALL
132A	INTERIOR	3'0"x8'0"	1-3/4"	D-1A	LAMIN.		LAM-1	SF-10	ALUM.		ANOD-1	2-A	08/A6.3		
133A	INTERIOR	3'0"x8'0"	1-3/4"	D-1A	LAMIN,		LAM-1	SF-10	ALUM.		ANOD-1	1-A	08/A6.3		

DOOR SCHEDULE (CONT'D 2)

DOOR #	TYPE	SIZE	DOOR THICK.	DOOR ELEV.	DOOR MAT'L.	DOOR RATING	DOOR FINISH	FRAME ELEV.	FRAME MAT'L	FRAME RATING	FRAME FINISH	SET #	JAMB	SIGN	REMARKS
134A	EXTERIOR	6'0"x9'6"		D-11B	ALUM.		ANOD-2	CW-1	ALUM.		ANOD-2	7-C	18/A6.3 SIM		
135A	INTERIOR	6'0"x8'11"		D-9A	ALUM.		ANOD-1	SF-2	ALUM.		ANOD-1	7-C			
135B	EXTERIOR	6'0"x8'11"		D-9B	ALUM.		ANOD-1	SF-1	ALUM.		ANOD-1	7-C		A-1	
136A	EXTERIOR	9'0"x8'11"		D-13	ALUM.		ANOD-1	SF-4	ALUM.		ANOD-1	6-C*			*SINGLE LEAF
136B	EXTERIOR	3'0"x8'11"		D-14A	ALUM.		ANOD-1	SF-4	ALUM.		ANOD-1	6-C		A-1	
137A	INTERIOR	3'0"x8'0"		D-2	ALUM.		ANOD-1	SF-10	ALUM.		ANOD-1	6-C	08/A6.3		
137B	EXTERIOR	6'0"x9'6"		D-7B	ALUM.		ANOD-2	CW-3	ALUM.		ANOD-2	7-C			
137C	SECTIONAL	12'8"x12'0"		D-16	ALUM.		ANOD-1	D-16					06/A6.4		SEE 23/A5.2 & 05/A6.4
137D	SECTIONAL	12'8"x12'0"		D-16	ALUM.		ANOD-1	D-16					06/A6.4		SEE 23/A5.2 & 05/A6.4
138A	INTERIOR	3'0"x8'0"		D-2	ALUM.		ANOD-1	SF-26	ALUM.		ANOD-1	9-A,C	08/A6.3*		*F.O. FRAME FLUSH W/ WALL
138B	INTERIOR	3'0"x8'0"		D-2	ALUM.		ANOD-1	SF-26A	ALUM.		ANOD-1	9-A,C	08/A6.3*		*F.O. FRAME FLUSH W/ WALL
139A	INTERIOR	3'0"x8'0"		D-2	ALUM.		ANOD-1	SF-26	ALUM.		ANOD-1	9-A,C	08/A6.3*		*F.O. FRAME FLUSH W/ WALL
139B	INTERIOR	3'0"x8'0"		D-2	ALUM.		ANOD-1	SF-26A	ALUM.		ANOD-1	9-A,C	08/A6.3*		*F.O. FRAME FLUSH W/ WALL
140A	INTERIOR	3'0"x8'0"		D-2	ALUM.		ANOD-1	SF-26	ALUM.		ANOD-1	9-A,C	08/A6.3*		*F.O. FRAME FLUSH W/ WALL
140B	INTERIOR	3'0"x8'0"		D-2	ALUM.		ANOD-1	SF-26A	ALUM.		ANOD-1	9-A,C	08/A6.3*		*F.O. FRAME FLUSH W/ WALL
148A	INTERIOR	3'0"x8'0"		D-2	ALUM.		ANOD-1	SF-28	ALUM.		ANOD-1	6-A,C	08/A6.3*		*F.O. FRAME FLUSH W/ WALL
149A	INTERIOR	3'0"x8'0"	1-3/4"	D-1B	LAMIN.		LAM-1	SF-10	ALUM.		ANOD-1	3-B, 10	08/A6.3		
150A	INTERIOR	3'0"x8'0"	1-3/4"	D-1A	LAMIN.		LAM-1	SF-10	ALUM.		ANOD-1	3-B	08/A6.3		
151A	INTERIOR	3'0"x8'0"	1-3/4"	D-1A	LAMIN.		LAM-1	SF-10	ALUM.		ANOD-1	2-A	08/A6.3		
152A	INTERIOR	3'0"x8'0"	1-3/4"	D-1A	LAMIN.		LAM-1	SF-10	ALUM.		ANOD-1	4-A	08/A6.3		
153A	INTERIOR	3'0"x8'0"	1-3/4"	D-1B	LAMIN.		LAM-1	SF-10	ALUM.		ANOD-1	1-A,C	08/A6.3		
154A	INTERIOR	3'0"x8'0"	1-3/4"	D-1A	LAMIN.		LAM-1	SF-10	ALUM.		ANOD-1	9-A	08/A6.3		
201A	INTERIOR	8'0"x8'0"		D-12	ALUM.		ANOD-1	SF-24	ALUM.		ANOD-1	7	10/A6.3		
201B	INTERIOR	4'0"x7'0"	1-3/4"	D-5B	MTL.		PAINT	F-3	MTL.		PAINT	1-C	09/A6.3		S.S. PANEL BOTH SIDES
201C	EXTERIOR	3'0"x7'0"	1-3/4"	D-4B	MTL.		PAINT	F-1	MTL.		PAINT	3-C	15/A6.3	A-1	S.S. PANEL INTERIOR
201D	ROLL-UP	16'0"x12'0"		D-17	ALUM.		ANOD-1	D-17					04/A6.4		SEE 01/A6.4
202A	INTERIOR	3'0"x7'10"	1-3/4"	D-3C	MTL.		PAINT	F-2	MTL.		PAINT	3-C	10/A6.3 SIM		S.S. PANEL BOTH SIDES
203A	INTERIOR	3'0"x7'10"	1-3/4"	D-3C	MTL.		PAINT	F-2	MTL.		PAINT	3-C	10/A6.3 SIM		S.S. PANEL BOTH SIDES
203B	INTERIOR	4'0"x7'0"	1-3/4"	D-5C	MTL.		PAINT	F-3	MTL.		PAINT	3-C	09/A6.3		S.S. PANEL BOTH SIDES
204A	INTERIOR	3'0"x8'0"	1-3/4"	D-2	ALUM.		PAINT	SF-21	ALUM.		ANOD-1	?	10/A6.3 SIM		

DOOR SCHEDULE (CONT'D 3)

DOOR #	TYPE	SIZE	DOOR THICK.	DOOR ELEV.	DOOR MAT'L.	DOOR RATING	DOOR FINISH	FRAME ELEV.	FRAME MAT'L	FRAME RATING	FRAME FINISH	SET #	JAMB	SIGN	REMARKS
205A	ROLLING GRL	12'8"x4'6"		D-22	ALUM.		ANOD-1	D-22							
205B	EXTERIOR	3'0"x7'0"	1-3/4"	D-4B	MTL.		PAINT	F-1	MTL.		PAINT	4-C	15/A6.3	A-1	S.S. PANEL INSIDE ONLY
206A	FENCE	8'0"x9'0"		D-19A	STL.		GALV.	D-19A	STL.		GALV.				
206B	ROLL-UP	8'0"x12'0"		D-20	MTL.		PREFIN.	D-20	MTL.			10			
206C	EXTERIOR	3'0"x7'0"	1-3/4"	D-4B	MTL.		PAINT	F-1	MTL.		PAINT	4-C	15/A6.3	A-1	S.S. PANEL INSIDE ONLY
208A	INTERIOR	4'-0"x7'0"	1-3/4"	D-5A	MTL.		PAINT	F-3	MTL.		PAINT	3-C	09/A6.3		S.S. PANEL BOTH SIDES
208B	EXTERIOR	4'-0"x7'0"	1-3/4"	D-5A	MTL.		PAINT	F-3	MTL.		PAINT	4-C	15/A6.3		S.S. PANEL INSIDE ONLY
209A	EXTERIOR	6'-0"x7'0"	1-3/4"	D-6A	MTL.		PAINT	F-4	MTL.		PAINT	8	15/A6.3		
210A	INTERIOR	3'0"x7'0"	1-3/4"	D-4A	MTL.		PAINT	F-1	MTL.		PAINT	4-B	09/A6.3		
211A	INTERIOR	3'0"x7'0"	1-3/4"	D-4A	MTL.		PAINT	F-1	MTL.		PAINT	2-C	09/A6.3	B-1	S.S. PANEL BOTH SIDES
213A	INTERIOR	3'0"x7'0"	1-3/4"	D-4A	MTL.		PAINT	F-1	MTL.		PAINT	5-C	09/A6.3	B-1	S.S. PANEL BOTH SIDES
214A	INTERIOR	3'0"x7'0"	1-3/4"	D-4A	MTL.		PAINT	F-1	MTL.		PAINT	5-C	09/A6.3		S.S. PANEL BOTH SIDES
215A	INTERIOR	3'0"x7'0"	1-3/4"	D-4B	MTL.		PAINT	F-1	MTL.		PAINT	3-C	09/A6.3		S.S. PANEL BOTH SIDES
215B	EXTERIOR	3'0"x7'0"	1-3/4"	D-4B	MTL.		PAINT	F-1	MTL.		PAINT	4-C	15/A6.3	A-1	S.S. PANEL INSIDE ONLY
215C	ROLL-UP	12'0"x12'0"		D-18A	MTL.		PREFIN.	D-18A	MTL.				02/A6.4 SIM		SEE 01/A6.4
215D	ROLL-UP	12'0"x12'0"		D-18A	MTL.		PREFIN.	D-18A	MTL.				02/A6.4 SIM		SEE 01/A6.4
216A	ROLL-UP	12'0"x12'0"		D-18A	MTL.		PREFIN.	D-18A	MTL.				[illegible]		SEE 01/A6.4
217A	INTERIOR	3'0"x7'0"	1-3/4"	D-4B	MTL.		PAINT	F-1	MTL.		PAINT	3-C	09/A6.3		S.S. PANEL BOTH SIDES
218A	EXTERIOR	6'0"x7'0"	1-3/4"	D-6B	MTL.		PAINT	F-4	MTL.		PAINT	12-C	[illegible]		
220A	INTERIOR	3'0"x7'0"	1-3/4"	D-4B	MTL.		PAINT	F-1	MTL.		PAINT	3-C	[illegible]		S.S. PANEL BOTH SIDES
220B	EXTERIOR	3'0"x7'0"	1-3/4"	D-4B	MTL.		PAINT	F-1	MTL.		PAINT	4-C	[illegible]	A-1	S.S. PANEL INSIDE ONLY
220C	ROLL-UP	12'0"x12'0"		D-18B	MTL.		PREFIN.	D-18B	MTL.				[illegible] SIM		SEE 01/A6.4
301A	EXTERIOR	3'-0" X 7'-0"	1-3/4"	D-4B	MTL.		PAINT	F-1	MTL.		PAINT	4-C	15/A6.3	A-1	
301B	SECTIONAL	12'-0" X 10'-0"		D-21	ALUM.		ANOD-1	D-21					06/A6.4		
301C	SECTIONAL	12'-0" X 10'-0"		D-21	ALUM.		ANOD-1	D-21					06/A6.4		
301D	FENCE	SEE ELEV.		D-19B	STL.		GALV.	D-19B	STL.		GALV.				
401A	EXTERIOR	.	1-3/4"	[illegible]	MTL.		[illegible]	[illegible]	MTL.		PAINT	4-C		A-1	

NOTES:
1. THRESHOLDS SHALL BE INSTALLED TO MEET NORTH CAROLINA ACCESSIBILITY REQUIREMENTS AND ANSI A117.1-2009 REQUIREMENTS.
2. REFER TO STOREFRONT LEGEND FOR ANODIZED FINISH DESIGNATIONS.
3. REMOVE ALL DECALS/STICKERS FROM ALL DOORS AND/OR DOOR ASSEMBLIES UNLESS REQUIRED BY CODE.
4. DOORS NOTED AS 'PREFIN.' SHALL USE LAMINATE [illegible] 5. REFER TO FINISH & MATERIAL LEGEND.
5. DOORS NOTED AS 'LAM-1' SHALL USE THE FOLLOWING LAMINATE: WILSONART STUDIO TEAK 7960K-38

WALK-OFF MATS:

DOOR #	MAT	SIZE (APPROX.)	REMARKS
[illegible]	MAT-1	8'0"x4'0"	
[illegible]	MAT-1	3'0"x6'0"	
135B	MAT-1	7'10"x6'0"	
136A	MAT-1	9'0"x4'0"	
136B	MAT-1	3'0"x4'0"	

MAT NOTES:
1. MAT-1: PEDITRED LP - G3 WITH RECESSED TAPERED ANGLE FRAME BY IMPACT SPECIALTIES. CLEAR ANODIZED. HEAVY DUTY CARPET COLOR: 7325 WROUGHT IRON

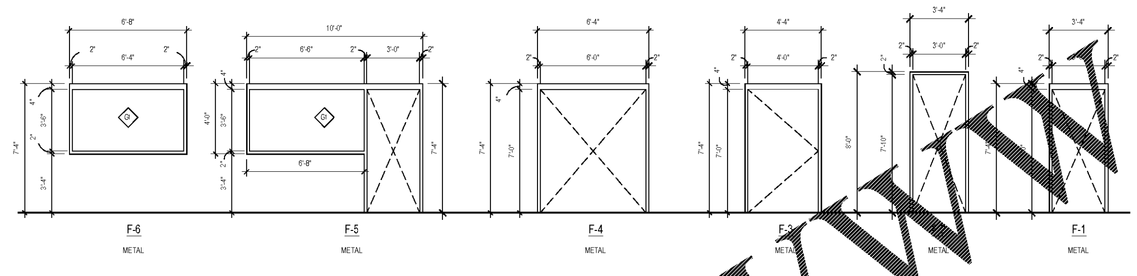

SCALE: 1/4" = 1'-0"
HOLLOW METAL FRAME ELEVATIONS 04

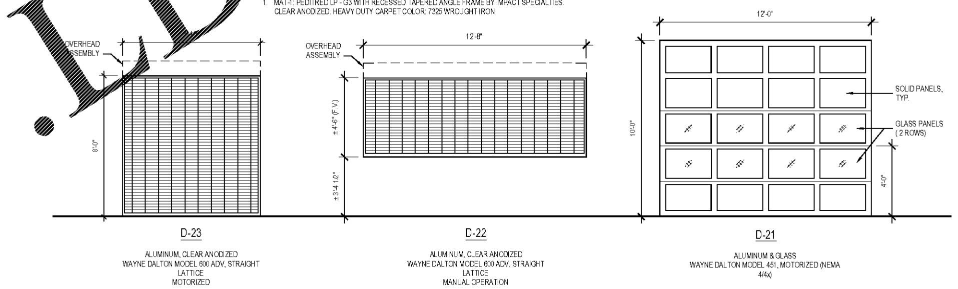

SCALE: 1/4" = 1'-0"
DOOR ELEVATIONS 03

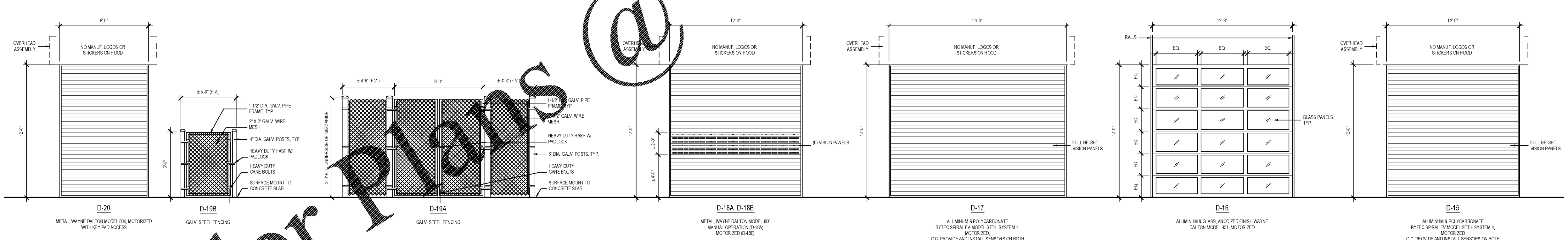

SCALE: 1/4" = 1'-0"
DOOR ELEVATIONS 02

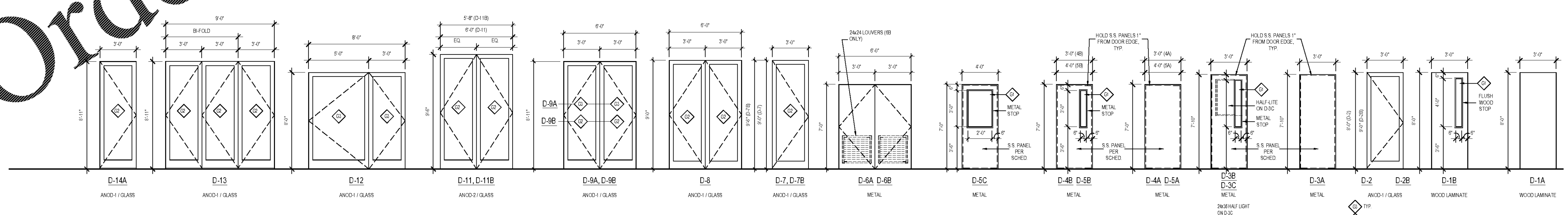

SCALE: 1/4" = 1'-0"
DOOR ELEVATIONS 01

FD | in+EGRA
an Integra Architecture, PLLC DBA
118 East Kingston Avenue, Ste. 20
Charlotte, NC 28203
704.372.0001
www.fdintegra.com

THE DRAWINGS & WRITTEN MATERIAL HEREIN CONSTITUTE ORIGINAL WORK OF THE ARCHITECT, & AS INTELLECTUAL PROPERTY & INSTRUMENTS OF SERVICE, ARE SUBJECT TO COPYRIGHT & MAY NOT BE MODIFIED, PUBLISHED DISTRIBUTED, REPRODUCED OR USED IN ANY WAY WITHOUT EXPRESS WRITTEN CONSENT OF THE ARCHITECT
© FD| INTEGRA

INTEGRA ARCHITECTURE, PLLC — REGISTERED ARCHITECTURAL CORPORATION — NORTH CAROLINA — CERT. NO. 53105 — CHARLOTTE, N.C.

NORTH CAROLINA PROFESSIONAL SEAL 13209 ARCHITECT RICHARD CUEBAS
Seals: 03/04/2020

HYUNDAI
HYUNDAI OF SOUTH CHARLOTTE

Revisions:

Number	Date	Description

Project Title:
HYUNDAI
SOUTH CHARLOTTE

10518 CADILLAC STREET
PINEVILLE, NC 28134

Project No.: 2536.00

Drawing Title:
DOOR SCHEDULE ELEVATIONS & DETAILS

SET ISSUE DATE
MARCH 4, 2020

Sheet:
A6.1

File: P:\2536.00 Hyundai of S Charlotte\DWGS_CD\A6 Series; Plotted: 3/4/2020 10:19 PM by CHRIS; Saved: 3/4/2020 10:18 PM by CHRIS

Order Plans @ www.LDILine.com