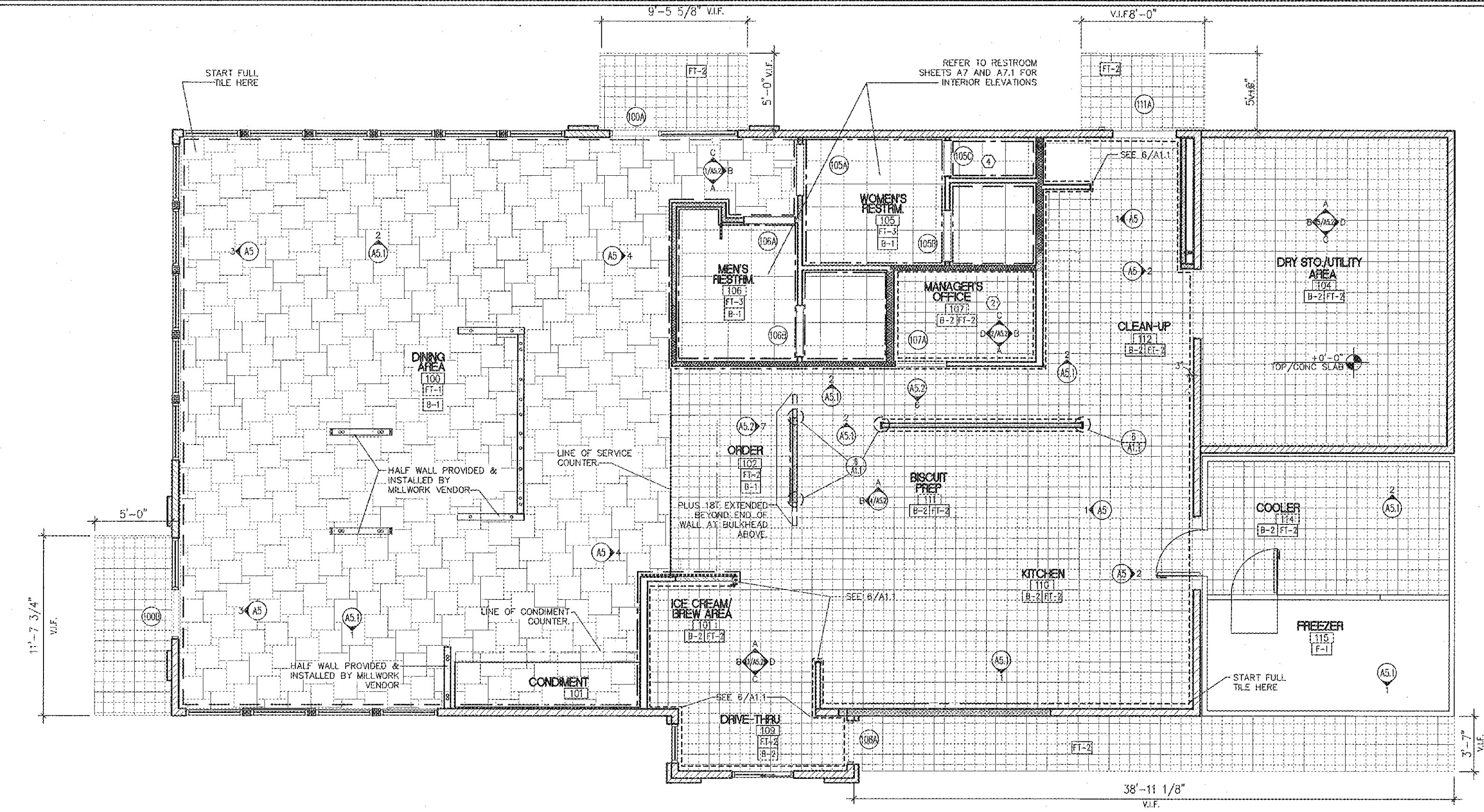

FINISHES PLAN

SCALE: 3/16" = 1'-0" (1)

WALL SUBSTRATE LEGEND

- 1/2" CEMENT BOARD TO 12" A.F.F. W/ 1/2" GYP. BD. TO 6" AB. CLG. U.O.N. ALSO SEE NOTE #4.
- 1/2" CEMENT BOARD TO STRUCTURE ABOVE.
- 1/2" CEMENT BD. TO 12" A.F.F. W/ 1/2" EXT. GRADE OSB FROM 12" TO 6" AB. CLG.
- SOUND ATTENUATION ACCOUSTIAL BATT INSULATION
- ½" CEMENT BD. TO 12" A.F.F. ½" EXT. OSB TO STRUCTURE

SUBSTRATE KEYNOTES ⟨X⟩

1. GYP. BD. SHALL BE 1/2" TYPE "X" GYP. BD. AND EXTEND TO STRUCTURE ABOVE
2. MGR. OFF. TO HAVE ½" EXT.OSB BEHIND ½" GYP.BD.

GENERAL NOTES:

1. ALL SUBSTRATE @ HOOD LOCATIONS SHALL EXTEND TO STRUCT. ABOVE. REFER TO WALL SECTIONS FOR ADDITIONAL INFORMATION.
2. ALL EXTERIOR WALLS SHALL RECIEVE R-19 KRAFT FACED INSULATION.
3. DIMENSIONS SHOWN ARE FINISH DIMENSIONS, U.O.N.

PLAN LEGEND & KEY NOTES

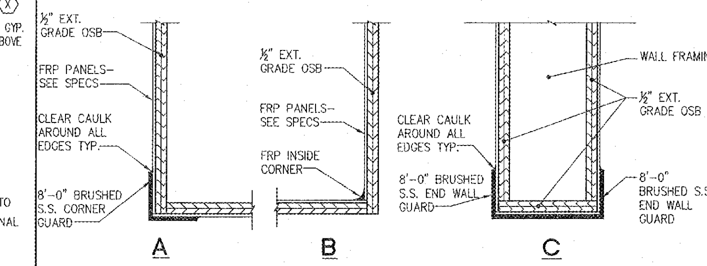

CORNER GUARD DETAIL (TYP. FOOD PREP AREA) N.T.S. (6)

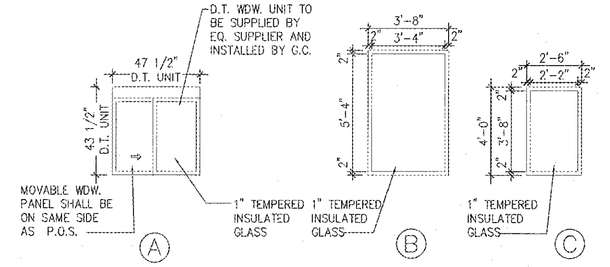

WINDOW SCHEDULE

MARK	FINISHED WDW. SIZE	MATERIAL	HEAD	JAMB	SILL	REMARKS
A	47 1/2"x 43 1/2"	BLACK ANOD. ALUM.	2/A6	14/A8	13/A8	
B	3'-8"x 5'-8"	BLACK ANOD. ALUM.	3/A6	3/A6	3/A6	
C	2'-6"x 4'-0"	BLACK ANOD. ALUM.	15/A8 SIM.	15/A8 SIM.	15/A8	
D	NOT USED					

NOTE:
DOOR & WINDOW FRAME SIZES SHOWN ARE UNIT SIZES. ROUGH OPENINGS AND UNITS ARE TO BE FIELD VERIFIED PRIOR TO FABRICATION

NOTE:
DRIVE-THRU WDW. UNIT TO BE SUPPLIED BY EQ. SUPPLIER, INSTALLED BY G.C.

NOTE:
WDW. FRAMES SHALL BE KAWNEER TRIFAB 451 OR EQUAL.

NOTE:
PROVIDE SILL PAN WITH END DAMS, TYP. AT SILL CONDITION OF WINDOWS.

NOTE:
GLASS TO BE SOLARBAN 67 (2) CLEAR O[illegible]DOOR LITE AND CLEAR [illegible]DOOR [illegible] SHG 0.[illegible] AND U-V[illegible] 0.2[illegible]

WINDOW SCHEDULE

SCALE: [illegible]4" = 1'-0" (2)

ROOM FINISH SCHEDULE

ROOM TAG	ROOM/AREA DESCRIPTION	FLOOR	BASE	WALL	CEILING	CLG/HGT
100	DINING AREA	FT-1	B-1	L-2, P1	[illegible]T-1, [illegible]-2	1[illegible]-0"
101	CONDIMENT AREA	FT-1	–	QU-1, P1	GYP. BD. [illegible]OFFIT [illegible]	[illegible]-8"
102	ORDER AREA	FT-2	B-2	CT-1, CT-[illegible]	C[illegible]	10'-0"
103	NOT USED					
104	DRY STORAGE/UTILITY AREA	FT-2	B-2	FR[illegible]	GYP-2 / P-5	VARIES W/ SLOPE
105	WOMEN'S TOILET AREA	FT-3	B-1	CT-1, [illegible]2	GYP-1 / P-5	8'-0"
106	MEN'S TOILET AREA	FT-3	B-1	CT-1, C[illegible]-2	GYP-1 / P-5	8'-0"
107	MANAGERS OFFICE	FT-2	B-2	[illegible]RP-1 S[illegible] REMARKS	ACT-3	9'-0"
108	ICE CREAM/BEVERAGE	FT-2	B-2	FRP-1	ACT-3	8'-0"
109	DRIVE-THRU AREA	FT-2	B-2	FRP-1	ACT-3	8'-0"
110	KITCHEN AREA	FT-2	B-2	FRP-1, SS-1	ACT-3	8'-0"
111	BISCUIT PREP AREA	FT-2	B-2	FRP-1, SS-1	ACT-3	8'-0"
112	CLEAN-UP/PREP AREA	FT-2	B-2	FRP-1	ACT-3	8'-0"
113	NOT USED					
114	COOLER	FT-2	--	FACTORY FINISH	FACTORY FINISH	8'-0"
115	FREEZER	F-1	--	FACTORY FINISH	FACTORY FINISH	8'-0"

REMARKS:

SEE DECOR DRAWINGS FOR ADDITIONAL FINISH SPECIFICATIONS

REFER TO INTERIOR ELEVATIONS FOR VARIOUS FINISH LOCATIONS.

REF. "MATERIALS SCHEDULE", SHT. A-2 FOR ADDITIONAL CEILING SPECIFICATIONS

MANAGERS OFFICE TO HAVE FRP OVER 1/2" GYP.

ROOM FINISH SCHEDULE N.T.S. (3)

MATERIAL SCHEDULE

SYMBOL	MATERIAL	DESCRIPTION	REMARKS
ACT-1	2'x 2' CEILING TILE	ARMSTRONG -- FINE FISSURED #928 WHITE COLORED TILE WITH SQUARE EDGE. ARMSTRONG 15/16" TEE GRID SYSTEM WITH MATCHING WHITE COLOR.	
ACT-2	2'x 2' CEILING TILE	ARMSTRONG – FINE FISSURED #1728 BL – TECH BL[illegible] COLORED TILE WITH SQUARE EDGE. ARMSTRONG 15/16" EXPOSED TEE GRID SYSTEM WITH MATCHING TE[illegible]H BLACK COLOR.	
ACT-3	2'x 2' WASHABLE CEILING TILE	USG (800) 950-3839 – SHEETRO[illegible] [illegible]LIMAPLUS 3270 VINYL FACED GYPSUM LAY-IN PANELS, 24"[illegible] 1/2" SQUARE EDGE, WHITE STIPPLE, w/DONN SE[illegible]ES DXL C[illegible] A 15/16" STANDARD EXPOSED GRID [illegible]TEM, COL[illegible] [illegible]AT [illegible]ATEX	
GYP-1	GYP. BOARD. CEILING	GYP. BOARD CEILING (RESTROO[illegible] PAINTED SH[illegible]N WILLIAMS SW7009 COLOR: -- PEARLY WHITE	PAINT
GYP-2	GYP. BOARD. CEILING	GYP. BD. [illegible]ING (DRY STORAGE AREA) [illegible]INTED SHERWIN WILLIAMS SW700[illegible] COLOR: PEARLY WHITE [illegible] SATIN LATEX	PAINT
FRP-1	FIBERGLASS REINFORCED PANEL -- FRP	MARLITE (O[illegible] EQU[illegible]) : 'WHITE" PROVIDE MATCHING MOULDING AND TRIM	
B-1	TILE BASE	CROSSVILLE [illegible] AV213 6"x12" COLOR: BISTRO BROWN GROU[illegible] LATI[illegible]CETE #[illegible]5 MOCHA, JOINTS: 3/16"	
B-2	TILE BASE	CROSSVILLE [illegible]880 ONYX COVE BASE 6"x8" GROU[illegible] [illegible] MOCHA, JOINTS: 3/16"	
FT-1	FLOOR TILE	CROSSVILLE – AV213 18"x18" COLOR: BISTRO BROWN WITH CROSSVILLE – AV213 [illegible]"x6" COLOR: BISTRO BISTRO BROWN GROUT: LATICRETE #35 MOCHA, JOINTS: 3/16"	LAY TILE IN LARGE PINWHEEL PARTERN (PER CROSSVILLE PATTERN 22) BACKER BOARD BEHIND TILE
FT-2	[illegible]ASIVE FLOOR [illegible]	CROSSVILLE CROSSTREAD A880 ONYX 8"x8" GROUT: LATICRETE #35 MOCHA, JOINTS: 3/16"	PATTERN LAYOUT AT 90' SQUARE GRID BACKER BOARD BEHIND TILE
FT-3	FLOOR TILE	CROSSVILLE – AV213 18"x18" COLOR: BISTRO BROWN GROUT: LATICRETE #35 MOCHA, JOINTS: 3/16"	90' SQ. GRID PATTERN BACKER BOARD BEHIND TILE
F-1	FACTORY FLOOR	FLOOR PROVIDED BY FREEZER/COOLER MANUFACTURER	
CT-1	WALL TILE – FIELD	CROSSVILLE – AV291 12"x24" – COLOR: SILICA * SEE CT-2 WALL ACCENT TILE FOR ADDITIONAL INFORMATION *PROVIDE SCHULTER OUTSIDE CORNER TRIM & END TERMINATION TRIMS AS REQUIRED. SHALL MATCH OTHER METAL TRIM TREATMENTS IN SHEEN & METAL TYPE.	GROUT: LATICRETE #24 GRAY JOINTS: 3/16"
CT-2	WALL TILE – ACCENT (w/CT-1 WALL TILE – FIELD)	CROSSVILLE – AV285 12"x36" – COLOR: BANK ROLL. INSTALL A SINGLE ROW OF THIS ACCENT TILE AT 5'-6" A.F.F. TO THE BOTTOM EDGE OF THE ACCENT TILE. SEE INTERIOR ELEVATIONS, SHTS. A5, A5.1, AND A5.2.	GROUT: LATICRETE #24 GRAY JOINTS: 3/16"
SS-1	STAINLESS STEEL PANELS	18ga. – #4 BRUSHED FINISH – WITH TRIM STRIPS	FURN. & INSTALLED BY G.C. \ M.C.
SS-2	STAINLESS STEEL CORNER GUARDS	PROVIDED / INSTALLED BY G.C. SEE SHEETS A1.1 AND SHEETS A5, A5.1, AND A5.2 FOR ADDITIONAL INFORMATION	
L-1	PLASTIC LAMINATE	SELECTED DOORS – WILSONART: 4832 SATIN OXIDE (TEXTURED)	SEE SHEET A1.1 "DOOR TYPES"
L-2	WALL COVERING LAMINATE / WAINSCOT	PROVIDED / INSTALLED BY DECOR NATIONAL ACCOUNT. PROVIDED / INSTALLED ARE 1/8" NUDO PANELS w/ WILSONART 4832 SATIN OXIDE TEXTURED LAMINATE WITH ALL METAL TRIM PIECES. ALSO PROVIDED / INSTALLED IS CHAIR RAIL SCHLUTER MTL. TRIM PRODUCT(S).	
L-3	FEATURE WALL LAMINATRE w/ FEATURE MTL. STAR	PROVIDED / INSTALLED BY G.C. 1/2" LAMIN: PANELS WITH NEYAMAR: WT003T VALENICA TEAK TEXTURE (HORIZONTAL GRAIN) ALONG WITH METAL TRIM PRECAST STAINLESS STEEL STAR	ALL TILE PROVIDED AND INSTALLED BY G.C.
P-1	PAINT	SHERWIN WILLIAMS -- SW7039 COLOR: VIRTUAL TAUPE	SATIN LATEX
P-2	PAINT	SHERWIN WILLIAMS -- SW6601 COLOR: TANAGER	SATIN LATEX
P-3	PAINT	SHERWIN WILLIAMS -- SW6258 COLOR: TRICORN BLACK	SATIN ENAMEL
P-4	PAINT	SHERWIN WILLIAMS -- SW6107 COLOR: NOMADIC DESERT	FLAT LATEX
P-5	PAINT	SHERWIN WILLIAMS -- SW7009 COLOR: PEARLY WHITE	SATIN LATEX

* ALL GROUT CAULK WILL BE "SANDED" IN A LATTICRETE COLOR. MATCH TO "TOOLS 4 FLOORING" WEBSITE

MATERIAL SCHEDULE N.T.S. (4)

DOOR SCHEDULE

ROOM#	MARK	DOOR FINISHED OPENING SIZE	MATERIAL	DOOR TYPE	DOOR FINISH	FRAME TYPE	FRAME FINISH	HARDW. SET	NOTES (NOTE: DOOR & WINDOW FRAME SIZES ARE TO BE FIELD VERIFIED PRIOR TO FABRICATION)
100	100A	3'-0"x 7'-0"	BLACK ANOD. ALUM. DOOR w/TEMP. GLASS AND BLACK ANOD. ALUM. FRAME	A	---	A	---	[illegible]	190 SER[illegible] DOOR/ TRIFAB 451 SERIES FRAME BY KAWNEER OR EQ.
100	100B	3'-0"x 7'-0"	BLACK ANOD. ALUM. DOOR w/TEMP. GLASS AND BLACK ANOD. ALUM.FRAME	A	[illegible]	B	---	1	190 SERIES DOOR/TRIFAB 451 SERIES FRAME BY KAWNEER OR EQ.
105	105A	3'-0" x 6'-8"	HOLLOW METAL FRAME	[illegible]	L-1	[illegible]	P-[illegible]	2	--
105	105B	3'-0" x 5'-0"	HOLLOW METAL FRAME	[illegible]	[illegible]	[illegible]	P-1	4	TOILET STALL (HANG DOOR CENTERED IN FRAME)
105	105C	2'-0" x 5'-0"	HOLLOW METAL FRAME	G	L-1	E	P-1	4	TOILET STALL (HANG DOOR CENTERED IN FRAME)
106	106A	3'-0" x 6'-8"	HOLLOW METAL FRAME	B	L-1	C	P-1	2	--
106	106B	3'-0" x 5'-0"	HOLLOW METAL FRAME	F	L-1	C	P-1	4	TOILET STALL (HANG DOOR CENTERED IN FRAME)
107	107A	3'-0" x 6'-8"	HOLLOW METAL FRAME	E	L-1	C	P-1	3	
108	108A	2'-6" x 7'-0"	BLACK ANOD. [illegible]M. DOOR W/ [illegible]P. GLASS AND [illegible]ACK ANOD. ALUM. FRAME	H	---	F	---	1	DOOR/FRAME BY KAWNEER OR EQ., TRIFAB 450 SERIES
111	111A	4'-0" x [illegible]	HOLLOW [illegible] FRAME	C	P-3	D	P-3	5	

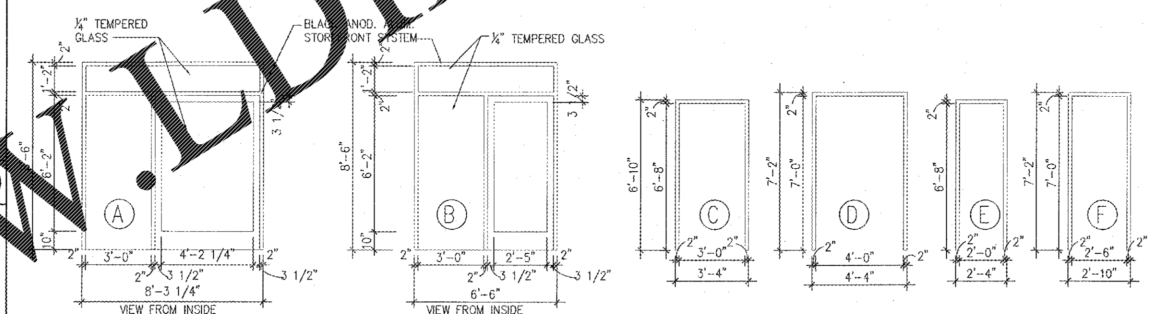

FRAME TYPES

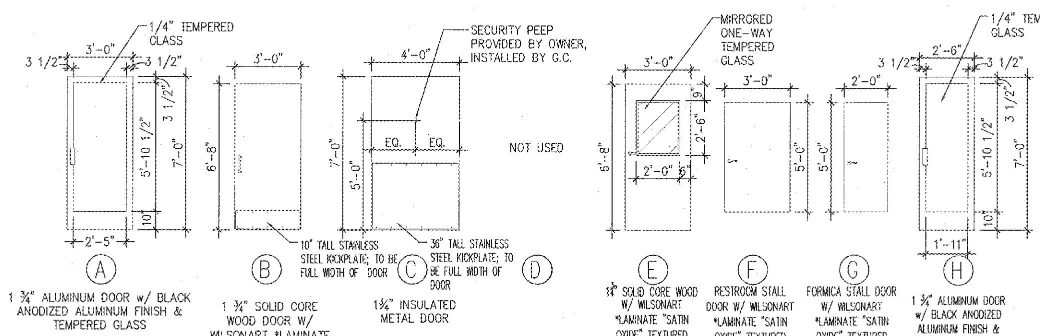

A: 1 ¾" ALUMINUM DOOR w/ BLACK ANODIZED ALUMINUM FINISH & TEMPERED GLASS

B: 1 ¾" SOLID CORE WOOD DOOR W/ WILSONART *LAMINATE "SATIN OXIDE" TEXTURED #4832

C: 1¾" INSULATED METAL DOOR

E: 1¾" SOLID CORE WOOD W/ WILSONART *LAMINATE "SATIN OXIDE" TEXTURED #4832

F: RESTROOM STALL DOOR W/ WILSONART *LAMINATE "SATIN OXIDE" TEXTURED #4832

G: FORMICA STALL DOOR W/ WILSONART *LAMINATE "SATIN OXIDE" TEXTURED #4832

H: 1 ¾" ALUMINUM DOOR w/ BLACK ANODIZED ALUMINUM FINISH & TEMPERED GLASS

*LAMINATE ON ALL SIDES INCLUDING TOP AND BOTTOM

DOOR TYPES

HARDWARE SCHEDULE

HARDWARE SET NO. 1
ALL DOOR HARDWARE FURNISHED IN STANDARD DOOR PACKAGE INCLUDING PANIC HARDWARE; EXTERIOR CYLINDER DEADBOLT LOCK WITH INTERIOR THUMBTURN TO MEET ADA; OFFSET PIVOT HINGES; THRESHOLD; WEATHER STRIPPING.
1 4040 HEAVY DUTY CLOSER WITH 18TJ.

HARDWARE SET NO. 2

1 ½ PR. HINGES FBB-179 4 ½ X 4 ½	STANLEY	US 26D
1 CLOSER 1461T SERIES	LCN	ALUMINUM
1 KICKPLATE 20 GAUGE STAINLESS STEEL 10x36"	LDW	BALDWIN US 32D
1 CAST PULL #6N	HAGER	US 26D
1 PUSH PLATES #40R 3"x 12"	HAGER	US 26D
1 WALL MOUNTED DOOR STOP #WS406	IVES	ALUMINUM
1 WALL-MOUNTED HANDICAP/BRAILLE SIGN @ 60" BLACK/WHITE-PLASTIC	AFF	HED

HARDWARE SET NO. 3

1 ½ PR. HINGES FBB-179 4 ½ X 4 ½	STANLEY	US 26D
1 CLOSER 1460 SERIES	LCN	SBL
1 WALL-MOUNTED DOOR STOP #WS406	IVES	ALUMINUM
1 #CL3651 LEVER LOCKSET W/STRIKE	CORBIN/RUSSWIN	US 26D

HARDWARE SET NO. 4

1 ½ PR. HINGES FBB-179 4 ½ X 4 ½	STANLEY	US 26D
1 CLOTHES HOOK & DOOR BUMPER B-212	BOBRICK	US 26D
1 #CL3620 LEVER LOCKSET W/STRIKE	CORBIN-RUSSWIN	US 26D

HARDWARE SET NO. 5

1 CONTINUOUS HALF-SURFACE HINGE: WITH THREE BLOCK-OUT PLATES ON DOOR	MARKAR #HS-203 OR HAGER/ROTON #780-053HD OR PEMKO #HSHD	US 26D
1 CLOSER: 4040 H-CUSH	LCN	ALUMINUM/BLACK
1 ARMOR PLATE 36" X 46" WITH S.S. SCREWS	BALDWIN OR BURNS	ALUMINUM/BLACK
1 THRESHOLD w/ VINYL WEATHERSTRIP	PEMKO 179AVx48	US 28
1 RAINDRIP 346 C 48"	PEMKO	ALUMINUM – PAINT BLACK IN FIELD
1 SURFACE MOUNTED EXIT ONLY PANIC EXIT DEVICE- NO EXTERIOR TRIM, STANDARD STRIKE	ADAMS-RITE #8300-01	628 FINISH CLEAR ANODIZED

HARDWARE NOTES
1. PRODUCTS DESIGNATED BY RUSSWIN, BALDWIN, LCN, EXIT SECURITY, AND STANLEY MAY BE SUBSTITUTED WITH APPROVED EQUALS BY YALE, SCHLAGE, AND PHOENIX.
2. FINISHES MAY BE SUBSTITUTED WITH US 32D SATIN STAINLESS STEEL IN LIEU OF US 28 SATIN ALUMINUM FINISH SCHEDULED.
3. WEATHERSTRIPPING AROUND EXTERIOR DOOR OPENINGS SHALL PROVIDE A MAXIMUM INFILTRATION RATE OF 11 CFM PER LINEAR FOOT IN A 25 MPH WIND MEASURED IN ACCORDANCE WITH APPLICABLE ANSI STANDARDS.
4. ALL DOOR HARDWARE TO BE BLACK TO MATCH DOOR.
5. GC TO CHANGE LOCKS AND PROVIDE 8 KEYS AT TURN OVER.
6. ALL LAMINATE DOORS TO BE LAMINATED ON ALL SIDES.

DOOR SCHEDULE SCALE: 1/4" = 1'-0" (5)

NRD Project # 18228

NRD national restaurant designers
ARCHITECTS & ENGINEERS
3005 CARRINGTON MILL BLVD. SUITE 105
MORRISVILLE, NORTH CAROLINA 27560
ph: 919 544 7251 fax: 919 544 9399
A Division of LMHT Associates

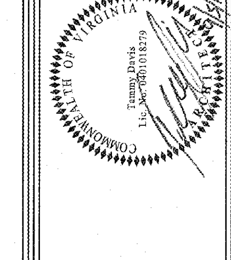

Hardee's
BNE WOOD PROTOTYPE REVERSE
LARGE DINING ROOM- BN2016 LD-R
COUNTY DRIVE
DISPUTANTA, VA 23842

OWNER:
BODDIE-NOELL ENTERPRISES, INC.
P.O. BOX 1908
ROCKY MOUNT, N.C.
27802-1908
(252) 937-2800

REVISIONS

NO.	DESCRIPTION	DATE

DRAWN BY	CHECKED BY

FINISH PLAN AND SCHEDULES

DATE: 9-4-2019

SHEET NUMBER: A-1.1

18223_A1.1.dwg Sep 04, 2019 - 4:29pm

Order Plans @ WWW.LDIIine.com