STEEL SQUARE POLES

Use ONLY with "Wind Speed Map for ASCE7-10

STEEL SQUARE POLES - ASCE7-10										
POLE	110 MPH	115 MPH	120 MPH	130 MPH	140 MPH	150 MPH	160 MPH	170 MPH	180 MPH	Bolt Circle
4" 11GA 14'	12.5	11.3	10.2	8.5	6.6	5.3	4.3	4.1	3.6	B
4" 11GA 16'	9.8	8.6	7.8	6.2	5.4	4.4	3.5	2.9	2.2	B
4" 11GA 18'	8.1	7.4	6.7	5.4	4.2	3.4	2.8	2.2	1.7	B
4" 11GA 20'	7.1	6.3	5.6	4.4	3.4	2.7	2.1	1.8	1.1	B
4" 11GA 22'	9.9	8.2	7.9	6.3	5.1	4.0	2.1	2.6	2.0	B
4" 11GA 24'	8.8	7.8	6.8	5.3	4.2	3.3	2.5	1.9	1.3	B
4" 11GA 26'	6.5	6.1	5.5	4.3	3.2	2.3	1.8	1.8	0.5	B
4" 7GA 20'	10.7	8.7	8.7	7.0	5.7	4.6	3.8	3.1	2.3	B
4" 7GA 22'	11.3	10.2	9.1	7.3	5.9	4.7	3.5	2.7	2.1	B
4" 7GA 24'	9.8	8.8	7.8	6.3	4.5	3.5	2.8	2.1	1.6	B
4" 7GA 26'	7.9	7.1	6.1	4.7	3.8	2.8	1.9	1.2	0.7	B
5" 11GA 16'	18.1	16.4	14.8	12.3	10.3	8.7	7.3	6.3	5.3	C
5" 11GA 18'	15.7	14.2	12.8	10.5	8.7	7.3	6.1	5.1	4.3	C
5" 11GA 20'	13.5	12.3	11.1	9.0	7.4	6.0	4.8	3.8	3.1	C
5" 11GA 22'	15.8	14.3	12.8	10.2	8.3	6.5	5.4	4.2	2.5	C
5" 11GA 24'	13.5	12.5	10.6	8.6	6.7	5.2	3.9	3.0	2.1	C
5" 11GA 26'	11.3	10.2	8.9	6.8	5.3	4.0	3.0	2.2	1.5	C
5" 7GA 20'	20.7	18.8	17.0	14.0	11.7	9.8	7.9	7.0	5.9	D
5" 7GA 22'	25.5	23.3	21.0	17.5	14.6	12.3	10.4	8.8	7.5	D
5" 7GA 24'	23.3	21.0	19.0	15.6	12.9	10.7	9.6	7.5	6.3	D
5" 7GA 26'	20.0	18.0	16.2	13.2	10.7	8.9	7.2	6.0	4.8	D
5" 7GA 30'	16.4	14.6	13.0	10.3	7.9	6.5	5.2	4.0	3.1	D
6" 7GA 24'	33.9	30.8	28.5	23.7	19.6	16.7	14.0	11.8	10.2	J
6" 7GA 26'	29.2	28.2	23.7	19.3	15.9	13.2	11.0	8.9	7.5	J
6" 7GA 30'	23.6	21.2	19.0	15.2	12.3	9.9	8.0	6.4	5.0	J
6" 7GA 35'	17.8	15.2	13.8	10.7	8.7	6.2	4.6	3.2	2.1	J
6" 7GA 39'	12.9	11.9	10.4	7.7	5.8	3.8	2.4	1.2	0.2	J

All LSI Industries' poles are guaranteed to meet the EPA requirements listed. LSI Industries is not responsible if a pole order has a lower EPA rating than the indicated wind-loading zone where the pole will be located.
CAUTION: This guarantee does not apply if the pole/bracket/fixture combination is used to support any other items such as flags, pennants, or signs which would add stress to the pole. LSI Industries cannot accept responsibility for harm or damage caused in these situations.

STEEL SQUARE POLES

POLE ORDERING INFORMATION

TYPICAL ORDER EXAMPLE: **5SQB5 S07G 24 S PLP SF DGP**

Pole Series	Material	Height[2]	Mounting Configuration	Pole Finish	Options
Bolt-on Arm Mount - See pole selection guide for patterns and fixture matches. **4SQB3** - 3" Reduced drilling pattern **5SQB3** - 3" Reduced drilling pattern **4SQB5** - 5" Traditional drilling pattern **5SQB5** - 5" Traditional drilling pattern **6SQB5** - 5" Traditional drilling pattern	S11G – 11 Ga. Steel S07G – 07 Ga. Steel	14' 16' 18' 20' 22' 24' 26' 28' 30' 35' 39'	S – Single/Parallel D180° – Double D90° – Double DM90° – Double T90° – Triple TN120° – Triple Q90° – Quad QN90° – Quad	BRZ – Bronze BLK – Black PLP – Platinum Plus WHT – White SVG – Satin Verde Green GPT – Graphite MSV – Metallic Silver	GA – Galvanized Anchor Bolts SF – Single Flood[3] DF – Double Flood[3] DGP – DuraGrip® Plus LAB – Less Anchor Bolts OSXX – Pole preparation for PMOS Occupancy Sensor[4]
Tenon Mount - See pole selection guide for tenon and fixture/bracket matches **4SQN** **5SQN** **6SQN**	Consult Pole Selection Chart on opposite page		N – Tenon Mount (Standard tenon size is 2-3/8" O.D.)	**Standard SF and DF pole preparations are located 3/4 of the height of the pole from the base, unless otherwise specified.**	
No Mounting Holes - Use with: • BKA 4ISF & BKA 5ISF • BKA X4ISF & BKA X5ISF **Internal Slip-fitter[1]** **4SQI** **5SQI**					

ACCESSORY ORDERING INFORMATION (Accessories are field installed)

Description	Order Number	Description	Order Number
4BC – 4" Square Base Cover	122559CLR	Vibration Damper - 4" Square Pole (bolt-on mount only)	172539
5BC – 5" Square Base Cover	122561CLR	Vibration Damper - 5" Square Pole (bolt-on mount only)	172538
6BC – 6" Square Base Cover	122558CLR	Vibration Damper - 6" Square Pole (bolt-on mount only)	175361
DR2 – Weatherproof Duplex Receptacle	122566CLR	PMOS120 - 120V Occupancy Sensor	516030CLR[5]
GFI – Ground Fault Circuit Interrupter	122567CLR	PMOS208/240 - 208, 240V Occupancy Sensor	534298CLR[5]
MHP – Mounting Hole Plugs (3 plugs) for use with 5" traditional drill pattern	130856	PMOS277 - 277V Occupancy Sensor	516029CLR[5]
MHC – Mounting Hole Weatherproof Cover for use with 3" reduced drill pattern	349126	PMOS480 - 480V Occupancy Sensor	534299CLR[5]

FOOTNOTES:
1 - See Area Lighting Brackets 3" Reduced Drill Pattern and Area Lighting Brackets - Bolt-on 5" Traditional Drill Pattern spec sheets for Internal Slip-fitter brackets.
2 - Pole heights will have +/- 1/2" tolerance.
3 - See Flood Lighting Brackets section for choice of FBO brackets.
4 - Order PMOS separately. Change "XX" to indicate height and side of pole location for pole preparation. EX: OS12A indicates preparation is to be 12ft. up from pole base on side A. Optimal distance from ground to sensor is 20ft.
5 - OSXX option required. Not for use with Metal Halide fixtures.

BOLT CIRCLE

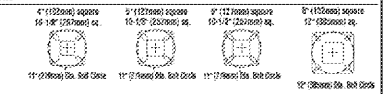

	B	C	D	J
Bolt Circle	Slotted 8"-11" (203mm-279mm)	Slotted 9"-11" (229mm-279mm)	Slotted 9"-11" (229mm-279mm)	Slotted 12" (305mm)
Anchor Bolt Size	3/4" x 30" (19mm x 762mm)	3/4" x 30" (19mm x 762mm)	1" x 36" (25mm x 914mm)	1" x 36" (25mm x 914mm)
Anchor Bolt Projection	3-1/4" (83mm)	3-1/4" (83mm)	4" (102mm)	4" (102mm)
Base Plate Opening for Wireway Entry	3-5/8" (92mm)	4-3/4" (121mm)	4-5/8" (117mm)	5-3/8" (143mm)
Base Plate Dimensions	10-1/2" sq. x 3/4" thk. (267mm x 19mm)	10-1/2" sq. x 3/4" thk. (267mm x 19mm)	10-1/2" sq. x 1" thk. (267mm x 25mm)	12" sq. x 1-1/8" thk. (305mm x 29mm)

Note: Base plate illustrations may change without notice. Do not use for setting anchor bolts. Consult factory for the base plate template.

STEEL SQUARE POLES

DIMENSIONS

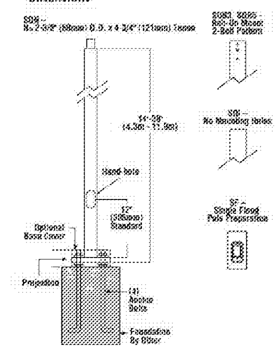

POLE SHAFT - Pole shaft is electro-welded ASTM-A500 Grade C steel tubing with a minimum yield strength of 50,000 psi. On Tenon Mount steel poles, tenon is 2-3/8" O.D. high-strength pipe. Tenon is 4-3/4" in length. Straight poles are 4", 5", and 6" square.

HAND-HOLE - Standard hand-hole location is 12" above pole base. Poles 22' and above have a 3" x 6" reinforced hand-hole. Shorter poles have a 2" x 4" non-reinforced hand-hole.

BASE - Pole base is ASTM-A36 hot-rolled steel plate with a minimum yield strength of 36,000 psi. Two-piece square base cover is optional.

ANCHOR BOLTS - Poles are furnished with anchor bolts featuring zinc-plated double nuts and washers. Galvanized anchor bolts are optional. Anchor bolts conform to ASTM F 1554-07a Grade 55 with a minimum yield strength of 55,000 psi.

GROUND LUG - Ground lug is standard.

DUPLEX RECEPTACLE - Weatherproof duplex receptacle is optional.

GROUND FAULT CIRCUIT INTERRUPTER - Self-testing ground fault circuit interrupter is optional.

FINISHES - Each pole is finished with DuraGrip®, LSI's baked-on polyester-powder finishing process which electrostatically applies and fuses a polyester powder to the pole. Provides an extremely smooth and uniform finish to withstand extreme weather changes without cracking or peeling, and features a five-year limited warranty. Optional DuraGrip® Plus features the added protection of a 3.0 to 5.0 mil thickness of polyester-powder finish plus an inner coating, as well as a seven-year limited warranty.

DETERMINING THE LUMINAIRE/POLE COMBINATION FOR YOUR APPLICATION
- Select luminaire from luminaire ordering information.
- Select bracket configuration if required.
- Determine EPA value from luminaire/bracket EPA chart.
- Select pole height.
- Select MPH to match wind speed of the application area (See windspeed maps).
- Confirm pole EPA equal to or exceeding value from note above.
- Consult factory for special wind load requirements and banner brackets.

DRILLING LOCATIONS

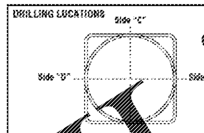

Sides	A	B	C	D
[illegible]	[illegible]	[illegible]	[illegible]	[illegible]

*Other two locations will be 120° to the left and right of Side A

Note: Standard SF and DF pole preparations are located 3/4 of the height of the pole from the base, unless otherwise specified.

SHIPPING WEIGHTS - Steel Square Poles

4"(102mm) sq. 11 Ga. is approximately	7.50 lbs/ft
4"(102mm) sq. 07 Ga. is approximately	10.50 lbs/ft
5"(127mm) sq. 11 Ga. is approximately	9.00 lbs/ft
5"(127mm) sq. 07 Ga. is approximately	12.50 lbs/ft
6"(152mm) sq. 07 Ga. is approximately	15.50 lbs/ft
Anchor Bolts (3/4" x 30") (19mm x 762mm)	15 lbs. (4 bolts)
Anchor Bolts (1" x 36") (25mm x 914mm)	30 lbs. (4 bolts)

ARRA Funding Compliant

WINDSPEED MAP FOR ASCE7-10

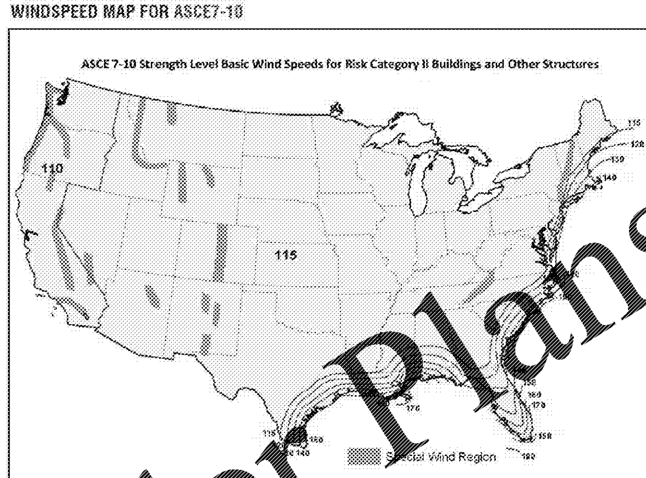

Wind Speed Map and Pole EPAs are based on ANSI/ASCE 7-10. Please inform LSI if your local code requirements differ; LSI can supply calculations to your code requirements.

NOTES:
1. Values are the fastest-mile speeds at 33 ft (10 m) above ground for exposure Category 2.
2. Linear interpolation between wind speed contours is acceptable.
3. When using this map to determine EPA ratings, always use high end of range.
4. Fixture and pole EPA values are based on wind pressures and forces specified in ANSI/ASCE 7-10.
5. Local codes may require wind speeds other than those shown on map.

All LSI Industries' poles are guaranteed to meet the EPA requirements listed. Pole manufacturer is not responsible if a pole order has a lower EPA rating than the indicated wind-loading zone where the pole will be located. **CAUTION**: This guarantee does not apply if the pole/bracket/fixture combination is used to support any other items such as flags, pennants, or signs, which would add stress to the pole. LSI Industries cannot accept responsibility for harm or damage caused in these situations.

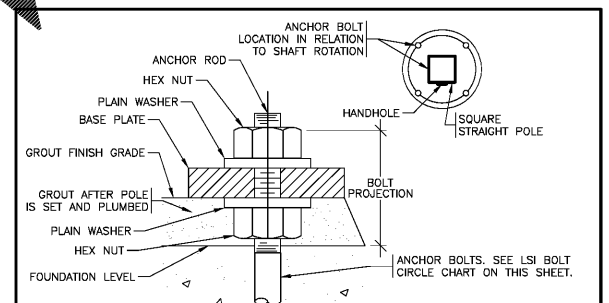

ANCHOR BOLT DETAIL BASE DIAGRAM (3/SP2)
N.T.S.

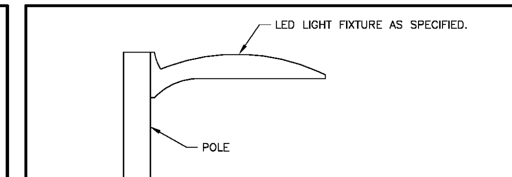

LED LIGHT MOUNTING DETAIL (1/SP2)
N.T.S.

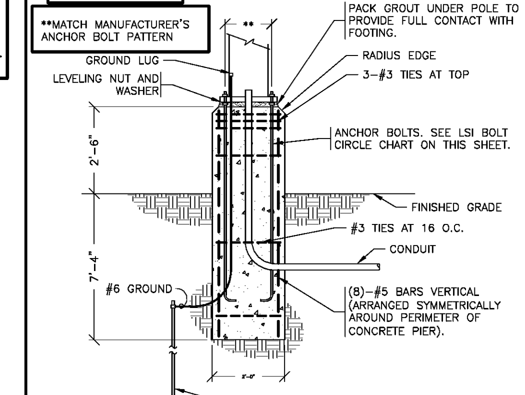

CONCRETE POLE LIGHT BASE DETAIL (2/SP2)
N.T.S.

GEORGIA REGISTERED No. PE044373 PROFESSIONAL ENGINEER ABBY L. THURMAN 1/8/20

SHEETS BEARING THIS SEAL ARE AUTHENTICATED, RESPONSIBILITY FOR ALL OTHER PLANS, SPECIFICATIONS OR INSTRUMENTS ARE DISCLAIMED.

O'Reilly AUTO PARTS
CORPORATE OFFICES
233 SOUTH PATTERSON
SPRINGFIELD, MISSOURI 65802
(417) 862-2674 TELEPHONE

PROJECT:
NEW O'REILLY AUTO PARTS STORE
6472 GA-42
REX, GEORGIA

SITE LIGHTING DETAILS

SGE SMITH-GOTH ENGINEERS, INC.
3855 S. JEFFERSON AVE.
SPRINGFIELD, MO 65807
P: 417-882-2200
F: 417-882-1188
WWW.SMITHGOTH.COM

DRAWN BY: LC
CHECKED BY: ALT/BLC
DATE: 1/8/20
REVISION:
PROJECT NUMBER: REX
SHEET NUMBER **SP2**

© COPYRIGHT 2019–2020 – DESIGNS, DRAWINGS AND SPECIFICATIONS ARE INSTRUMENTS OF SERVICE AND ARE THE PROPERTY OF THE DESIGN PROFESSIONAL. REPRODUCTION PROHIBITED WITHOUT THE EXPRESSED WRITTEN CONSENT OF THE DESIGN PROFESSIONAL.
Order Plans @ WWW.LDILine.com